Hannay Reels®
The reel leader.

Hannay Reels, Inc.
553 State Route 143, Westerlo, NY 12193
www.hannay.com
Email: reels@hannay.com

Phone 1-518-797-3791
Toll Free 1-877-GO-REELS (467-3357)
Fax 1-800-REELING (733-5464)
Int'l Fax 1-518-797-3259

ISO 114
PARTS LIST

FH3 ROLLER & SPOOL ASSEMBLY

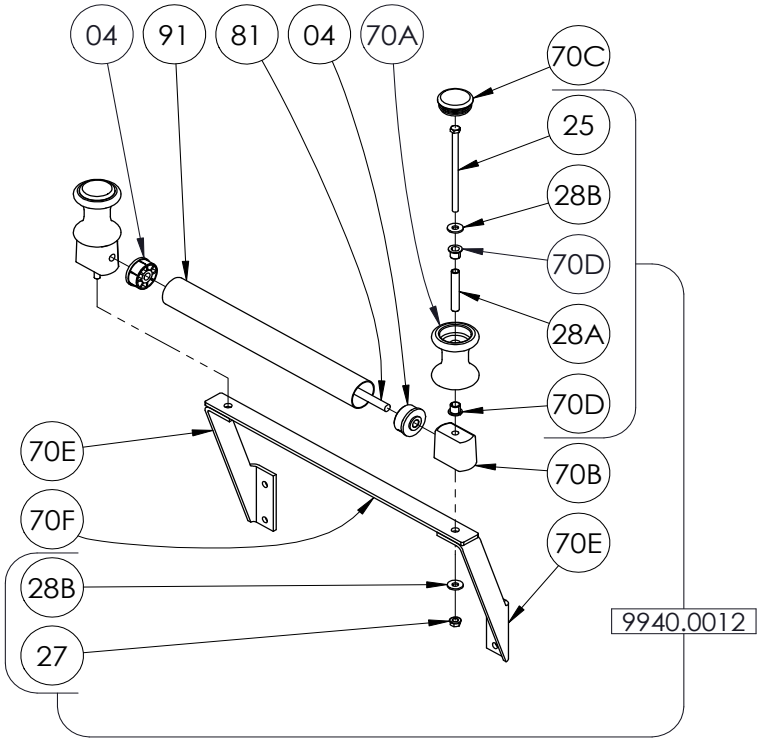

When Ordering Parts
BE SURE TO SPECIFY COMPLETE MODEL NUMBER and SERIAL NUMBER OF REEL
USE PART NUMBER!

Item No.	Description	Part No.	Quantity
Complete Assemblies (Mounting Brackets (Items 70D and 70E) must be ordered separately)			
-	FH-3 Spool Hardware Kit (includes Items 25, 27, 28A, 28B & 70D)	9940.0012	2
-	FH Complete Spool Assembly - Pair (Less SST Roller, Rod, & Trunnion Bearings)	9940.0013	1
-	FH-3 Roller & Spool Assembly (Specify Length, up to 30" Drum)	9939.0042	1
-	FH-3 Roller & Spool Assembly (Specify Length, 31" to 50" Drums)	9939.0043	1
04	FH-302-2, 2" Black Trunnion Bearing (Thru Hole Style)	9940.0008	2
25	3/8"-16 x 6-1/2" Hex Head Cap Screw	9940.0017	2
27	3/8"-16 Spinlock Nut	9904.6200	2
28A	FH-3 Aluminum Roller Spacer Sleeve for Roller Bolt (1/2" O.D. x 3/8" I.D. x 3.13")	9940.0019	2
28B	3/8" Flat Washer	9954.0007	4
70A	FH-301 Spool	9940.0005	2
70B	FH-302 Block	9940.0006	2
70C	FH-309-P Black Plastic Cap	9940.0002	2
70D	Flanged Sleeve Bearing (5/8" O.D. x 1/2" I.D. x 5/8")	9940.0011	4
70E	FH-3 Top-Wind Mounting Bracket Pair - Steel, per P70A-01150	9940.0060	1
70E	FH-3 Top-Wind Mounting Bracket Pair - Aluminum, per P70A-01150	9940.0061	1
70F	FH-3 Cross Member Brace - Steel (Specify Model)	9940.0062	1
70F	FH-3 Cross Member Brace - Aluminum (Specify Model)	9940.0066	1
81	FH-304, 1/2" Dia. 303 Stainless Steel Roller Rod (Specify Length)	9940.0009	1
91	FH-305, 2" Stainless Steel Roller Tubing (Specify Length)	9940.0010	1

FH-3 ROLLER MODELS

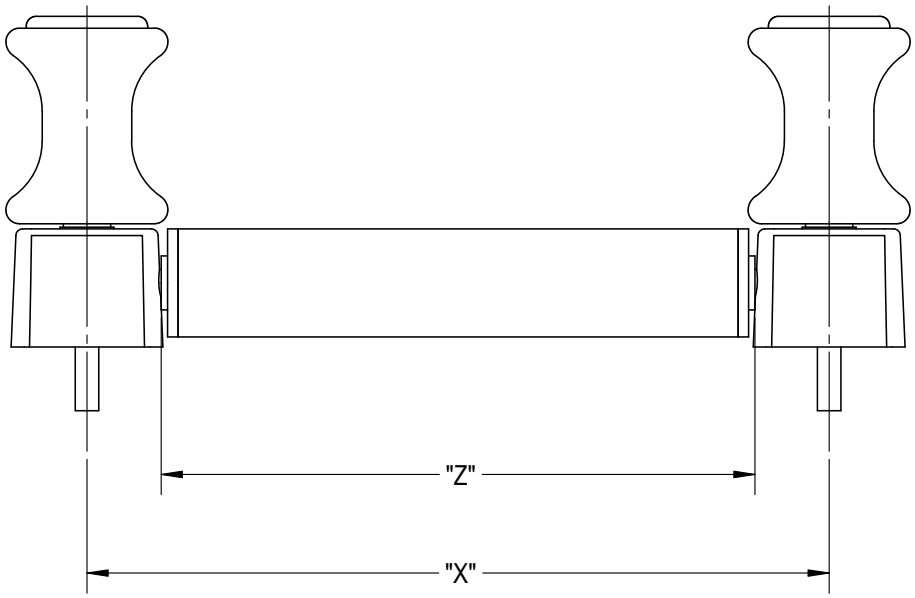

FH Roller Model	Hannay Part Number	Drum Length (in)	Roller Length “Z” w/bushings (in)	Mtg. Hole “X” Dimension (in)
FH-306	9939.0027	6.0	6.5	9.25
FH-307.5	9939.0029	7.5	8.0	10.75
FH-308	9939.0021	8.0	8.5	11.25
FH-309.5	9939.0030	9.5	10.0	12.75
FH-310	9939.0022	10.0	10.5	13.25
FH-311.5	9939.0031	11.5	12.0	14.75
FH-312	9939.0028	12.0	12.5	15.25
FH-313.5	9939.0032	13.5	14.0	16.75
FH-314	9939.0024	14.0	14.5	17.25
FH-315.5	9939.0033	15.5	16.0	18.75
FH-316	9939.0025	16.0	16.5	19.25
FH-317.5	9939.0034	17.5	18.0	20.75
FH-318	9939.0026	18.0	18.5	21.25
FH-320	9939.0035	20.0	20.5	23.25
FH-322	9939.0036	22.0	22.5	25.25
FH-324	9939.0037	24.0	24.5	27.25
FH-326	9939.0038	26.0	26.5	29.25
FH-328	9939.0039	28.0	28.5	31.25
FH-329.5	9939.0040	29.5	30.0	32.75
FH-330	9939.0020	30.0	30.5	33.25
FH-338	9939.0041	38.0	38.5	41.25
All other lengths	9939.0042	---	---	---

NOTES: *1) Actual roller tubing cut length is 5/8” less than “Z” dimension.*
2) FH cross-bracket piece is always 6” longer than drum length of reel.