Hannay Reels®
The reel leader.

Petroleum Hose Reels

| Home Fuel Delivery | In-plant Refueling | Marine Refueling |
| Off-road Vehicle/Equipment Refueling |

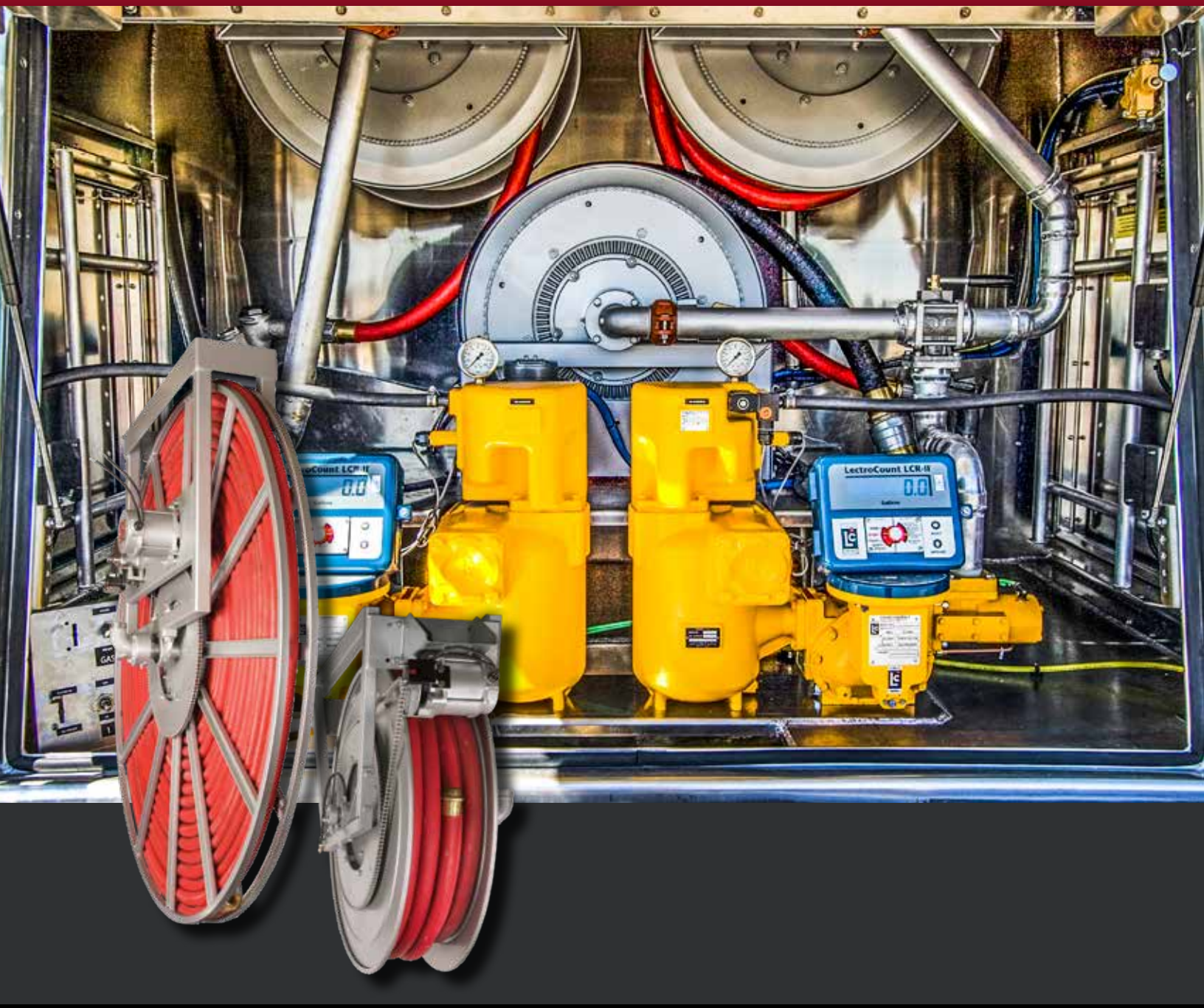

Family owned and operated since 1933

CONTENTS

Hannay hose reels come in all sizes and capacities.

Reel Type	I.D. Hose Sizes	Page
Hannay Reels Sales Policies		3
Manual or Power Rewind Reels		
Series 6000	1/2"– 1"	4-5
Series 1-1/2"	1-1/4" – 1-1/2"	6-7
Series 2"	1-1/2" or 2"	8
Spring Rewind Reels		
Series N800/800	3/4" or 1"	9
Series 900	1-1/4" or 1-1/2"	10
Power Rewind Reels		
Series IV	1-1/4" – 2"	11
Series IV5000	1-3/8" – 2"	12
Guide for Inverted Installations		13
DEF Reels		
Series DEF – Spring Rewind	1/2", 3/4", or 1"	14
Series DEF – Power or Manual Rewind	1/2" – 2"	15

Hannay Reels: The industry choice.

Designed to spec and built of the highest quality materials, our reels stand up to the most demanding conditions of any industry. We offer thousands of hose and cable reels that help improve efficiency, productivity, and safety in your operation by keeping hoses and cables organized and off the floor.

The heavy-duty design and construction of our reels ensure that they outlast the competition and save you money. And bolted-on components and conveniently located swivel joints make servicing our reels quick and trouble-free.

Every reel we build is created for the industry in which it will be used, from processing to welding to maintenance and more – never retrofitted to the job. That means you can trust Hannay reels to be durable and dependable for years to come.

Uses:

- Home fuel delivery
- In-plant Refueling
- Fueling vehicles
- Dispensing systems
- Marine Refueling
- Equipment/Vehicle Refueling

Note to Designers and Engineers

The reels shown in this catalog are the standard of the industry.

These models reflect various installation and performance requirements.

The high quality of our **standard steel construction** is only the beginning.

Hannay Reels offers any size configuration to fit a defined space, and we construct many models of reels of **aluminum** or **stainless steel**. Specifically, we use 5000 and 6000 Series aluminum and 304 stainless steel in the manufacture of frames, discs, drums, and internals as well as other structural components. This type of construction eliminates the need for maintenance repainting and part replacement due to rust or corrosion.

Please consult factory on any fuel handling questions.

For the many accessories and components available on our standard reel models such as roller guides, switches, brakes, and locks, etc., please refer to our Ordering & Accessory Guide H-0415-OA.

Mounting Hole Sizes	
N Series Reels	7/16" wide x 7/8" long slot running front to back
Pressed Frame Reels and Channel Framed Reels	7/16" wide x 7/8" long slot running left to right
IV Reels	9/16" diameter
IV5000 Reels	5/8" diameter

Hannay Reels **Sales Policies**

Hannay Reels 3-Year Limited Warranty

Products manufactured by Hannay Reels, Inc. ("Hannay") are warrantied for 3 years from date of shipment when properly installed, maintained, and operated in accordance with Hannay instructions. In no event will Hannay have a warranty obligation for normal wear and tear, or for products that have, at Hannay's determination, been subjected to accident, abuse, misapplication, improper installation or improper maintenance. Common examples of normal wear and tear would include paint finish, swivel joint seal wear, and switch or motor brush wear.

Hannay makes no warranties, express or implied, other than those included in this warranty statement, and we disclaim any implied warrant of merchantability or fitness for any particular purpose. Hannay will not be liable for any consequential, incidental, or indirect damages from any cause whatsoever.

Failure to use a flexible inlet connection on any live hose reel will void the swivel joint warranty. Failure to use a properly sized circuit breaker with any electric rewind motor will void the electric motor warranty. Failure to use a filter and lubricator on any air rewind motor will void the air motor warranty. Failure to follow all procedures outlined in the Safety Guidelines document will void the warranty.

Components not manufactured by Hannay will be subject to the original manufacturers' warranties. Examples of such components include: hose and cable, motors, speed controls, and switches, swivel joints and seals, slip ring and brush assemblies.

Equipment which proves to be defective upon our inspection will be replaced free of charge, including freight to the customer. Our responsibility ceases upon delivery to any common carrier and we do not, unless previously instructed, insure shipments beyond point of delivery to such carrier. **No material will be accepted for return without a return goods authorization (RGA).** This warranty extends to the replacement or repair of the reel or part (no labor).

Hannay reserves the right to modify or alter materials, dimensions, design, and construction when necessary to improve the performance of the reel and/or accessories, or to meet delivery requirements.

Notice on Reel Finish

Standard finish on Hannay reels is a high performance enamel paint. Standard color is metallic graphite. Other colors available, please consult factory.

Most of the major components on standard reels are e-coated prior to receiving final topcoat paint finish. This combination of e-coat and enamel topcoat will meet the finish requirements of most customer applications and environments.

In cases where requirements cannot be met with the standard finish, Hannay Reels can coat any model reel with an automotive primer, allowing application of final coating at your facility.

Alternatively, Hannay Reels can provide a quote for matching a customer-provided paint specification. For further information, please contact your Hannay Reels sales engineer and a special paint request form will be sent to you.

For environments where no paint finish is suitable, we offer both aluminum and stainless steel (304 grade) construction on most reel models.

Return Goods Policy

All Hannay reels are built to order. These orders are typically placed into production within 1 business day of receipt. Once production begins, it may not be possible to cancel the order.

To prevent returns because the wrong reels or parts were ordered, please use the Hannay Reels Spec Worksheet (either online or from our Ordering & Accessory Guide) when specifying reels. Be sure to include any size, weight, pressure and/or material compatibility limitations for the application.

In the event that an item does need to be returned for credit, repair or replacement, prior approval must be obtained from Hannay Reels. Upon your request, we will send a Return Goods Authorization (RGA) form. A signed copy of this form must accompany the material when returned to us, with the RGA number clearly showing on the outside of the box—a label is provided to you that you can print and attach. No product will be accepted for return or credit without an authorized RGA number.

All material must be returned prepaid, unless otherwise noted on our RGA. No return will be accepted that has been damaged due to improper return packaging, tampered with or altered from its original condition. Our restocking and handling fee is a minimum of 25% for standard catalog reels and parts. Custom reels specially built to customer specifications cannot be returned for any reason.

Series **6000**

To handle single 1/2" through 1" I.D. hose.

- Heavy-duty reel for longer lengths of hose.
- Choose gear-driven crank rewind or chain and sprocket drive powered by an electric, hydraulic or compressed air motor.
- Crank rewind reels supplied with pinion brake; power rewind reels with a strap brake.
- Standard inlet: 90° ball bearing swivel joints, 1" female NPT threads.
- Standard outlet: 1" female NPT threads.
- Standard: inlet, outlet riser, and hub assembly are steel. Options: swivel joint also available in aluminum or stainless steel. Riser and hub assembly also available in stainless steel.
- Rollers and roller mounting brackets are accessories. Specify roller position.
- Standard pressures to 2000 psi (138 bar).
- Standard fluid temperatures from -40° F to +250 °F (-40° C to +121° C). Optional temperature ratings available - consult factory.
- Chain guard available upon request, must be specified.
- Reel models designed for diesel exhaust fluid (DEF) are also available – refer to pages 14 & 15.

Standard configuration shown with Electric rewind (EP) option

Optional Auxiliary Rewind

Ring and pinion shaft rewind unit with removable crank handle.

Optional Assembly C2 roller top wind with mounting brackets and auxiliary crank rewind shown

Phone: **518-797-3791** | Toll Free: **1-877-467-3357** | FAX: **518-797-3259** | Email: **reels@hannay.com** | **hannay.com**

Series **6000**

PARTS DRAWING – ISO 84

Model Number For power rewind see Note 5	Hose Capacity of Reel feet m			Approx. Weight Crank Rewind lb. kg see Note 4		Reel Dimensions*** in. mm									
	I.D. in. mm / O.D. in. mm	1/2 13 / 7/8 22	3/4 19 / 1-9/32 33	1 25 / 1-1/2 40	NET	SHIP	A	B	D	E	F CRANK	F POWER	G	H	X	Y
6024-19-21-10.5		200	100	60	85	127	21	15.5	20.5	18.75	25.38	28.5	21.5	12.12	13	16.75
		61	30	18	39	58	533	394	521	476	645	724	546	308	330	425
6032-19-21-10.5		325	175	85	102	144	29.5	24	20.5	18.75	33.88	37	21.5	12.12	21.5	16.75
		99	53	26	46	65	749	610	521	476	861	940	546	308	546	425
6024-23-24-10.5		400	150	125	92	134	21	15.5	20.5	22.75	25.38	28.5	23.5	12.12	13	16.75
		122	46	38	42	61	533	394	521	578	645	724	597	308	330	425
6030-23-24-10.5		–	225	200	105	147	27.5	22	20.5	22.75	31.88	35	23.5	12.12	19.5	16.75
		–	68	61	48	67	699	559	521	578	810	889	597	308	495	425
6038-23-24-10.5		–	300	250	120	162	35	29.5	20.5	22.75	39.38	42.5	23.5	12.12	27	16.75
		–	91	76	54	73	889	749	521	578	1000	1080	597	308	686	425
6016-25-26-10.5		250	100	75	88	130	13	7.5	25.5	24.75	17.38	20.5	27.88	15.5	7.75	21.75
		76	30	23	40	59	330	191	648	629	441	521	708	394	197	552
6022-25-26-10.5		450	175	125	100	142	19	13.5	25.5	24.75	23.38	26.5	27.88	15.5	11	21.75
		137	84	38	45	64	483	343	648	629	594	673	708	394	279	552
6028-25-26-10.5		–	275	175	113	155	25.5	20	25.5	24.75	29.88	33	27.88	15.5	17.5	21.75
		–	84	53	51	70	648	508	648	629	759	838	708	394	445	552
6018-30-31-10.5		400	200	150	101	151	15	9.5	25.5	28.75	19.38	22.5	29.88	15.5	7	21.75
		122	61	46	46	68	381	241	648	730	492	572	759	394	178	552
6024-30-31-10.5		–	350	250	113	163	21	15.5	25.5	28.75	25.38	28.5	29.88	15.5	13	21.75
		–	107	76	51	74	533	394	648	730	645	724	759	394	330	552
6028-30-31-10.5		–	450	300	121	171	25.5	20	25.5	28.75	29.88	33	29.88	15.5	17.5	21.75
		–	137	91	55	78	648	508	648	730	759	838	759	394	445	552
† 6028-33-34-10.5		–	–	400	125	175	25	20	31.5	31.75	29.75	33.06	33.63	17.75	17.5	27.75
		–	–	122	57	79	635	508	800	806	756	840	854	451	445	705

Notes:

1. Specifications subject to change.
2. Upon request, reels can be supplied with drum lengths other than shown and with disc sizes in other diameters.
3. Dimensions shown for reels up to and including 30-31 disc size reflect pressed frames. All others are rollformed channel frames.
4. Weights shown in chart are for crank rewind models. ADD these amounts for power rewind models:

	Net lbs/kg	Ship lbs/kg
Electric 1/2 HP	40/18.1	40/18.1
Hydraulic	20/9.1	20/9.1
Air	20/9.1	20/9.1

5. When ordering power rewind models, prefix model number with:
   - **A** = Air Rewind – Supplied with control valve and 18" air hose.
   - **EP** = Electric Rewind (1/2 HP) – 12v and 24v DC rewind supplied with non-explosion-proof switch and solenoid; 115v AC rewind is not supplied with switch but it can be ordered separately.
   - **EPJ** = Explosion-Proof Electric Rewind (1/2 HP) – 12v and 24v DC rewind supplied with explosion-proof switch, solenoid, and junction box. 115v AC rewind supplied with explosion-proof switch and junction box.
   - **HD** = Hydraulic Rewind – Not supplied with control valve.
6. **Finish:** Refer to page 3.
7. **Be sure to check dimensions and weights prior to ordering.**

NOTICE: A flexible connector must be used between the inlet pipe and the inlet swivel joint.

*** X, Y indicate mounting holes. See page 2.

† Some applications require a clutch/reduction unit.

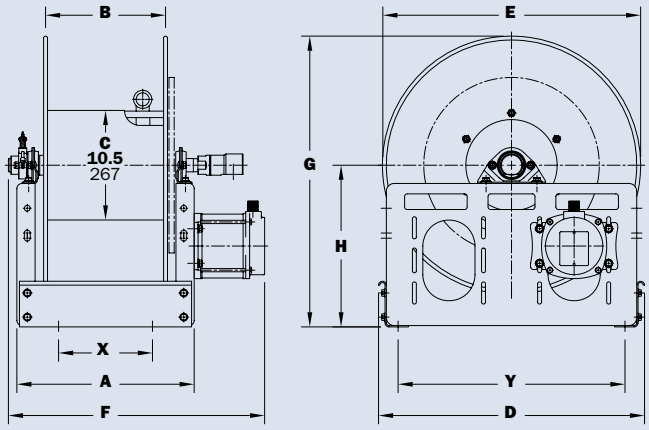

Series **1-1/2"**

To handle single 1-1/4" through 1-1/2" I.D. hose.

- A strong, heavy-duty reel.
- Gear-driven crank rewind or chain and sprocket drive powered by an electric, hydraulic or compressed air motor.
- Optional auxiliary crank rewind for power rewind reels.
- Choose EP or EPJ option.
- Strap brake, standard on power rewind without auxiliary crank.
- Standard inlet: 90° ball bearing swivel joint, 1-1/2" female NPT threads and 2" Victaulic® groove.
- Standard outlet: 1-1/2" female NPT threads.
- Other sizes and/or threads can be furnished and must be specified.
- Standard: inlet, outlet riser, and hub assembly are steel. Options: also available in aluminum or stainless steel.
- Rollers and roller mounting brackets are accessories. Specify roller position.
- Chain guard is available upon request, must be specified.
- Standard pressures to 600 psi (41 bar).
- Standard fluid temperatures from -40° F to +400 °F (-40° C to +204° C). Optional temperature ratings available - consult factory.
- Consult factory for other pressures and temperatures.
- Reel models designed for diesel exhaust fluid (DEF) are also available – refer to pages 14 & 15.

Standard configuration shown with Electric Rewind (EPJ) option

Standard configuration shown with Electric Rewind (EPJ) option and optional Assembly C2 roller and mounting brackets

Series **1-1/2"**

PARTS DRAWING – ISO 18

Model Number For Power Rewind see Notes 4 & 5	Hose Capacity of Reel feet m			Approx. Weight Crank Rewind lb. kg See Note 4		Reel Dimensions*** in. mm									
	I.D. in. mm	1-1/4 32	1-3/8 35	1-1/2 38	NET	SHIP	A	B	D	E	F CRANK	F POWER	G	H	X	Y
	O.D. in. mm	1.81 46	1.92 49	2.10 53												
26-19-21-10.5		60	50	50	99	141	23	17.5	20.5	18.75	29.5	31.88	21.5	12.12	15	16.75
		18	15	15	45	64	584	445	521	476	749	810	546	308	381	425
32-19-21-10.5		75	75	75	112	154	29.5	24	20.5	18.75	36.0	38.38	21.5	12.12	21.5	16.75
		23	23	23	51	70	749	610	521	476	914	975	546	308	546	425
40-19-21-10.5		100	100	100	128	170	37.5	32	20.5	18.75	44.0	46.38	21.5	12.12	29.5	16.75
		30	30	30	58	77	953	813	521	476	1118	1178	546	308	749	425
24-23-24-10.5		85	75	50	102	144	21	15.5	20.5	22.75	27.5	29.88	23.5	12.12	13	16.75
		26	23	15	46	65	533	394	521	578	699	759	597	308	330	425
32-23-24-10.5		125	125	75	119	161	29.5	24	20.5	22.75	36.0	38.38	23.5	12.12	21.5	16.75
		38	38	23	54	73	749	610	521	578	914	975	597	308	546	425
38-23-24-10.5		175	150	100	130	172	35	29.5	20.5	22.75	41.5	43.88	23.5	12.12	27	16.75
		53	46	30	59	78	889	749	521	578	1054	1115	597	308	686	425
20-25-26-10.5		75	60	50	106	148	17	11.5	25.5	24.75	23.5	25.88	27.88	15.5	9	21.75
		23	18	15	48	67	432	292	648	629	597	657	708	394	229	552
24-25-26-10.5		100	75	75	114	156	21	15.5	25.5	24.75	27.5	29.88	27.88	15.5	13	21.75
		30	23	23	52	71	533	394	648	629	699	759	708	394	330	552
28-25-26-10.5		125	110	100	123	165	25.5	20.0	25.5	24.75	32.0	34.38	27.88	15.5	17.5	21.75
		38	34	30	56	75	648	508	648	629	813	873	708	394	445	552
16-30-31-10.5		50	50	50	106	156	13	7.5	25.5	28.75	19.5	21.88	29.88	15.5	7.75	21.75
		15	15	15	48	71	330	191	648	730	495	556	759	394	197	552
20-30-31-10.5		100	75	75	114	164	17	11.5	25.5	28.75	23.5	25.88	29.88	15.5	9	21.75
		30	23	23	52	74	432	292	648	730	597	657	759	394	229	552
†22-30-31-10.5		125	100	100	118	168	19	13.5	25.5	28.75	25.5	27.88	29.88	15.5	11	21.75
		38	30	30	54	76	483	343	648	730	648	708	759	394	279	552
†28-30-31-10.5		200	175	150	131	181	25.5	20.0	25.5	28.75	32.0	34.38	29.88	15.5	17.5	21.75
		61	53	46	59	82	648	508	648	730	813	873	759	394	445	552
†24-33-34-10.5		175	175	150	129	179	20.5	15.5	31.5	31.75	27.25	29.63	33.62	17.75	13	27.75
		53	53	46	59	81	521	394	800	806	692	753	854	451	330	705

Notes:

1. Specifications subject to change.
2. Upon request, reels can be supplied with drum lengths other than shown and with disc sizes in other diameters.
3. Dimensions shown for reels up to and including 30-31 disc size reflect pressed frames. All others are rollformed channel frames.
4. Weights shown in chart are for crank rewind models. ADD these amounts for power rewind models:

	Net lbs/kg	Ship lbs/kg
Electric	40/18.1	40/18.1
Hydraulic	20/9.1	20/9.1
Air	20/9.1	20/9.1

5. When ordering power rewind models, prefix model number with:
   - **A** = Air Rewind – Supplied with control valve and 18" air hose.
   - **EP** = Electric Rewind (1/2 HP) – 12v and 24v DC rewind supplied with non-explosion-proof switch and solenoid; 115v AC rewind is not supplied with switch but it can be ordered separately.
   - **EPJ** = Explosion-Proof Electric Rewind (1/2 HP) – 12v and 24v DC rewind supplied with explosion-proof switch, solenoid, and junction box. 115v AC rewind supplied with explosion-proof switch and junction box.
   - **HD** = Hydraulic Rewind – Not supplied with control valve.
6. For Air Rewind on models over 100 ft. of 1-1/2", consult factory.
7. **Be sure to check dimensions and weights prior to ordering.**

NOTICE: A flexible connector must be used between the inlet pipe and the inlet swivel joint. Some applications may require a different motor and/or a clutch/reduction unit.

***X, Y indicate mounting holes.

† Some applications may require a different motor and/or a clutch/reduction unit.

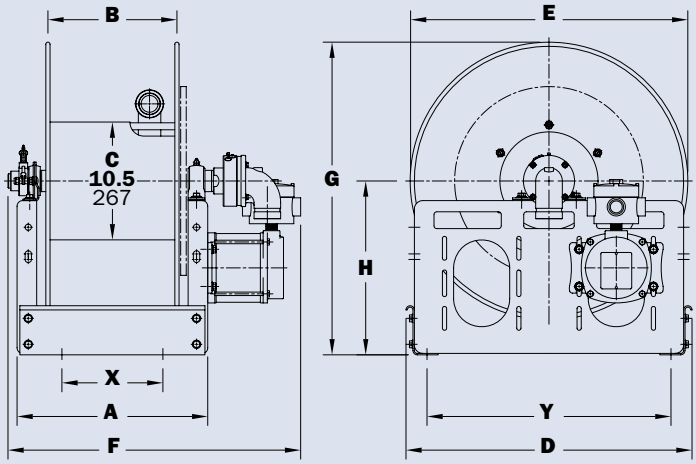

Series **2"**

To handle single 1-1/2" or 2" I.D. hose.

- Gear-driven crank rewind or chain and sprocket drive powered by an electric, hydraulic or compressed air motor.
- Optional auxiliary crank rewind for power rewind reels.
- Strap brake on power rewind without auxiliary crank.
- Standard inlet: 90° ball bearing swivel joint, 2" Victaulic® groove.
- Standard outlet: 2" female NPT threads.
- Other sizes and/or threads can be furnished and must be specified.
- Standard: inlet, outlet riser, and hub assembly are steel. Options: also available in aluminum or stainless steel.
- Rollers and roller mounting brackets are accessories. Specify roller position.
- Standard pressures to 600 psi (41 bar).
- Standard fluid temperatures from -40° F to +400 °F (-40° C to +204° C). Optional temperature ratings available - consult factory.
- Consult factory for other pressures and temperatures.

Standard configuration shown with Electric Rewind (EPJ) option

Chain Clutch - Reduction Units

- Recommended on reels with 39" diameter or larger discs, or when increased torque and slower rewind speeds are required.
- Factory installed.

PARTS DRAWING – ISO 35

Model Number For Power Rewind see Notes 3 & 4	Hose Capacity of Reel feet m			Approx. Weight Crank Rewind lb. kg See Note 3		Reel Dimensions*** in. mm									
	I.D. in. mm / O.D. in. mm	1-1/2 38 / 2.06 52	2 51 / 2.67 68	NET	SHIP	A	B	D	E	F CRANK	F POWER	G	H	X	Y
232-26-27-15.5		**70** 21	**50** 15	**104** 47	**154** 70	**23.75** 603	**17.5** 445	**27** 686	**25.75** 654	**31** 787	**32.75** 832	**26.62** 676	**13.75** 349	**16.25** 413	**23.25** 591
238-26-27-15.5		**100** 30	**75** 23	**145** 66	**195** 88	**30.25** 768	**24** 610	**27** 686	**25.75** 654	**37.5** 953	**39.25** 997	**26.62** 676	**13.75** 349	**22.75** 578	**23.25** 591
246-26-27-15.5		**140** 43	**100** 30	**196** 89	**246** 112	**38.25** 972	**32** 813	**27** 686	**25.75** 654	**45.5** 1156	**47.25** 1200	**26.62** 676	**13.75** 349	**30.75** 781	**23.25** 591
224-33-34-15.5		**60** 18	**50** 15	**70** 32	**140** 64	**15.75** 400	**9.5** 241	**31.5** 800	**31.75** 806	**23** 584	**24.75** 629	**33.38** 848	**17.5** 445	**8.25** 210	**27.75** 705
228-33-34-15.5		**100** 30	**75** 23	**92** 42	**162** 73	**19.75** 502	**13.5** 343	**31.5** 800	**31.75** 806	**27** 686	**28.75** 730	**33.38** 848	**17.5** 445	**12.25** 311	**27.75** 705
234-33-34-15.5		**140** 43	**100** 30	**133** 60	**203** 92	**26.25** 667	**20** 508	**31.5** 800	**31.75** 806	**33.5** 851	**35.25** 895	**33.38** 848	**17.5** 445	**18.75** 476	**27.75** 705
232-39-40-15.5		**250** 76	**150** 46	**180** 82	**250** 113	**23.75** 603	**17.5** 445	**40** 1016	**39** 991	**31** 787	**32.75** 832	**39.88** 1013	**20.38** 518	**16.25** 413	**36.75** 933
240-39-40-15.5		**350** 107	**200** 61	**218** 99	**288** 131	**32.25** 819	**26** 660	**40** 1016	**39** 991	**39.5** 1003	**41.25** 1048	**39.88** 1013	**20.38** 518	**22.75** 578	**36.75** 933

Notes:

1. Specifications subject to change.
2. Upon request, reels can be supplied with drum lengths other than shown and with disc sizes in other diameters.
3. Weights shown in chart are for crank rewind models. ADD these amounts for power rewind models:

	Net lbs/kg	Ship lbs/kg
Electric	**40**/18.1	**40**/18.1
Hydraulic	**20**/9.1	**20**/9.1
Air	**20**/9.1	**20**/9.1

4. When ordering power rewind models, prefix model number with:
   - **A** = Air Rewind – Supplied with control valve and 18" air hose.
   - **EP** = Electric Rewind (1/2 HP) – 12v and 24v DC rewind supplied with non-explosion-proof switch and solenoid; 115v AC rewind is not supplied with switch but it can be ordered separately.
   - **EPJ** = Explosion-Proof Electric Rewind (1/2 HP) – supplied with explosion-proof switch, solenoid, and junction box.
   - **HD** = Hydraulic Rewind – Not supplied with control valve.
5. **Be sure to check dimensions and weights prior to ordering.**

NOTICE: A flexible connector must be used between the inlet pipe and the inlet swivel joint.

***X, Y indicate mounting holes.

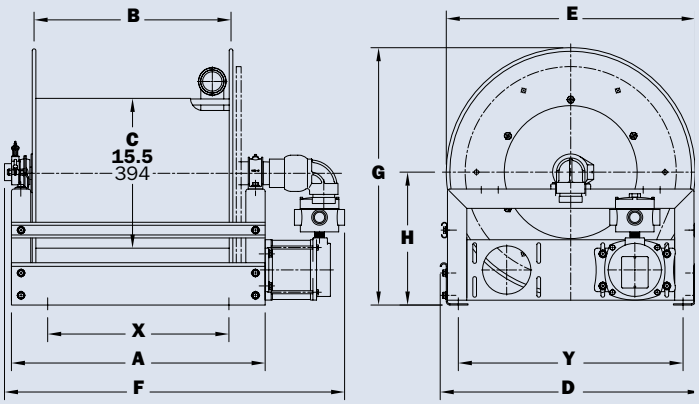

Phone: **518-797-3791** | Toll Free: **1-877-467-3357** | FAX: **518-797-3259** | Email: **reels@hannay.com** | **hannay.com**

Series **N800/800**

To handle 3/4" or 1" I.D. hose.

- Non-sparking ratchet assembly.
- Declutching arbor to prevent damage from reverse winding.
- Standard inlet: full flow swivel joint, 1" female NPT threads.
- Standard outlet: 1" female NPT threads.
- Standard: inlet, outlet riser, and hub assembly are steel. Options: also available in stainless steel.
- Standard pressures to 2000 psi (138 bar).
- Standard fluid temperatures from -40° F to +250 °F (-40° C to +121° C). Optional temperature ratings available - consult factory.
- 4-way roller assembly.
- Constant tension is available – consult factory.
- Reel models designed for diesel exhaust fluid (Series DEF) are also available – refer to pages 14 & 15.

Series N800

- Narrow frame and compact mounting base.

Series 800

- Rollformed channel frame for heavy-duty applications.

Series N800
Optional TR roller position shown

Series 800
Standard SR configuration shown

PARTS DRAWING – SERIES N800 - ISO 81; SERIES 800 - ISO 42

Model Number	Hose Capacity of Reel feet m		Approx. Weight lb. kg		Standard Roller Assy.	Reel Dimensions*** in. mm									
	I.D. in. mm / O.D. in. mm	3/4 19 / 1-9/32 33	1 25 / 1-1/2 40	NET	SHIP		A	B	C	D	E	F	G	H	X	Y
N816-25-26-10.5B		60 / 18	35 / 11	96 / 44	131 / 59	N204	10 / 254	4 / 102	10.5 / 267	12 / 305	25.5 / 648	14.12 / 359	26 / 660	13.62 / 346	8 / 203	10 / 254
N818-25-26-10.5B		– / –	50 / 15	102 / 46	137 / 62	N206	12 / 305	6 / 152	10.5 / 267	12 / 305	25.5 / 648	16.16 / 410	26 / 660	13.62 / 346	10 / 254	10 / 254
N818-25-26-10.5G		75 / 23	– / –	108 / 49	143 / 65	N206	12 / 305	6 / 152	10.5 / 267	12 / 305	25.5 / 648	16.16 / 410	26 / 660	13.62 / 346	10 / 254	10 / 254
N818-25-26-10.5 SD		75 / 23	– / –	110 / 46	145 / 66	N206	12 / 305	6 / 152	10.5 / 267	12 / 305	25.5 / 648	16.91 / 430	26 / 660	13.62 / 346	10 / 254	10 / 254
816-25-26-10.5B		50 / 18	35 / 11	96 / 44	131 / 59	R204	9.25 / 235	4 / 102	10.5 / 267	26.25 / 667	24.75 / 629	14.75 / 375	25.88 / 657	13.5 / 343	4.5 / 114	21.75 / 552
818-25-26-10.5B		– / –	50 / 15	102 / 46	137 / 62	R206	11.25 / 286	6 / 152	10.5 / 267	26.25 / 667	24.75 / 629	16.75 / 425	25.88 / 657	13.5 / 343	6.5 / 165	21.75 / 552
818-25-26-10.5SD		75 / 23	– / –	110 / 46	145 / 66	R206	11.25 / 286	6 / 152	10.5 / 267	26.25 / 667	24.75 / 629	17.5 / 445	25.88 / 657	13.5 / 343	6.5 / 165	21.75 / 552
820-25-26-10.5A		– / –	75 / 23	131 / 59	166 / 75	R308	13.25 / 337	8 / 203	10.5 / 267	27 / 686	24.75 / 629	19.5 / 495	25.88 / 657	13.5 / 343	8.5 / 216	21.75 / 552
820-30-31-10.5A		– / –	100 / 30	137 / 62	172 / 78	R308	13.25 / 337	8 / 203	10.5 / 267	30.5 / 775	28.75 / 730	19.5 / 495	31.38 / 797	17 / 432	8.5 / 216	25.25 / 641
820-30-31-15.5A		100 / 30	– / –	145 / 66	180 / 82	R308	13.25 / 337	8 / 203	15.5 / 394	30.5 / 775	28.75 / 730	19.5 / 495	31.38 / 797	17 / 432	8.5 / 216	25.25 / 641

Notes:

A hose stop is necessary to keep spring from unwinding.

1. Specifications subject to change.
2. Reel models and capacities shown are for standard drag applications; for heavy-duty or vertical lift applications, consult factory.
3. Other sizes, from standard components, available on request.
4. **Finish:** Refer to page 3.
5. **Be sure to check dimensions and weights prior to ordering.**

NOTICE: A flexible connector must be used between the inlet pipe and the inlet swivel joint.

*** X, Y indicate mounting holes. See page 2.

Available Roller Positions

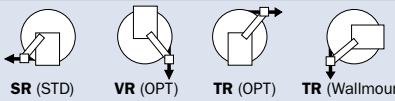

SR (STD) **VR** (OPT) **TR** (OPT) **TR** (Wallmount)

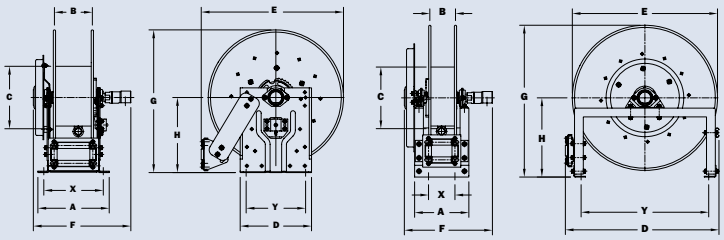

Series N800 Series 800

Series **900**

To handle 1-1/4" or 1-1/2" I.D. hose.

- Rollformed channel frame construction.
- Non-sparking ratchet assembly.
- Declutching arbor to prevent damage from reverse winding.
- Standard inlet: 90° swivel joint, 1-1/2" female NPT threads and 2" Victaulic® groove.
- Standard outlet: 1-1/2" female NPT threads.
- Standard: inlet, outlet riser, and hub assembly are steel. Options: also available in aluminum or stainless steel.
- Standard pressures to 600 psi (41 bar).
- Standard fluid temperatures from -40° F to +400 °F (-40° C to +204° C). Optional temperature ratings available - consult factory.
- 4-way roller assembly.
- Constant tension is available – consult factory.
- Reel models designed for diesel exhaust fluid (DEF) are also available – refer to pages 14 & 15.

Standard SR configuration shown

PARTS DRAWING – ISO 29

Model Number	Hose Capacity of Reel feet m			Approx. Weight lb. kg		Standard Roller Assy.	Reel Dimensions*** in. mm								
	I.D. in. mm / O.D. in. mm	1-1/4 32 / 1-13/16 46	1-1/2 38 / 2-1/16 52	NET	SHIP		A	B	D	E	F	G	H	X	Y
922-23-24-10.5B		40 / 12	25 / 8	104 / 47	139 / 63	R310	15.25 / 387	10 / 254	25.25 / 641	22.75 / 578	24 / 610	23.88 / 607	12.5 / 318	10.5 / 267	20 / 508
920-25-26-10.5A		50 / 15	40 / 12	127 / 58	162 / 73	R308	13.25 / 337	8 / 203	27 / 686	24.75 / 629	22.75 / 578	25.88 / 657	13.5 / 343	8.5 / 216	21.75 / 552
922-30-31-10.5A		75 / 23	50 / 15	156 / 71	191 / 87	R310	15.25 / 387	10 / 254	30.5 / 775	28.75 / 730	24.75 / 629	31.38 / 797	17 / 432	10.5 / 267	25.25 / 641

Notes:

A hose stop is necessary to keep spring from unwinding.

1. Specifications subject to change.
2. Reel models and capacities shown are for standard drag applications; for vertical lift applications, consult factory.
3. Other sizes, from standard components, available on request.
4. **Finish:** Refer to page 3.
5. **Be sure to check dimensions and weights prior to ordering.**

NOTICE: A flexible connector must be used between the inlet pipe and the inlet swivel joint.

*** X, Y indicate mounting holes. See page 2.

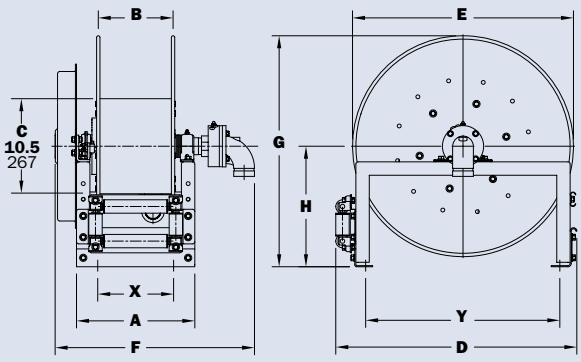

Available Roller Positions

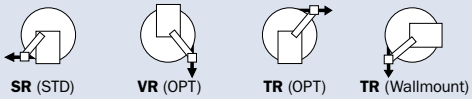

SR (STD) **VR** (OPT) **TR** (OPT) **TR** (Wallmount)

Phone: **518-797-3791** | Toll Free: **1-877-467-3357** | FAX: **518-797-3259** | Email: **reels@hannay.com** | **hannay.com**

Series IV

• For Inverted Installation

To handle single 1-1/4" I.D. through 2" I.D. hose.

- Chain and sprocket drive powered by an electric, hydraulic, or compressed air motor.
- Strap brake and air caliper brake are standard.
- Standard inlet: 90° ball bearing swivel joint, 1-1/2" female NPT threads and 2" Victaulic® groove.
- Optional 2" internals also available.
- Standard outlet: 1-1/2" female NPT threads.
- Standard: inlet, outlet riser, and hub assembly are steel. Options: also available in aluminum or stainless steel.
- Standard pressures to 600 psi (41 bar).
- Standard fluid temperatures from -40° F to +400 °F (-40° C to +204° C). Optional temperature ratings available - consult factory.
- Consult factory for other pressures and temperatures.
- Refer to page 13 for installation options.

Standard configuration shown Installation "A" (see page 13)

PARTS DRAWING – ISO 103

Model Number For Power Rewind see Note 3	Hose Capacity of Reel feet m				Approx. Weight lb. kg		Reel Dimensions*** in. mm									
	I.D. in. mm	1-1/4 32	1-3/8 35	1-1/2 38	2 51	NET	SHIP	A	B	C	D	E	F	G	H	X	Y
	O.D. in. mm	1.81 46	1.92 49	2.10 53	2.56 65												
IV 24-33-34-10.5		175 53	175 53	150 46	– –	198 90	252 114	22.25 565	15.5 394	10.5 267	32.13 816	41 1041	30.5 774	33.75 857	17.88 454	20.25 514	24.88 632
IV 22-35-36-10.5		200 61	200 61	125 38	– –	206 93	261 118	20.25 514	13.5 343	10.5 267	32.13 816	41.75 1060	28.5 723	34.75 882	17.88 454	18.25 464	24.88 632
* IV 18-39-40-15.5		175 53	125 38	100 30	70 21	260 118	320 145	16.25 413	9.5 241	15.5 394	34.25 870	45.5 1156	24.5 622	40.75 1035	21.25 540	14.25 362	26.88 683
* IV 20-39-40-15.5		200 61	175 53	150 46	100 30	271 123	331 150	18.25 464	11.5 292	15.5 394	34.25 870	45.5 1156	26.5 673	40.75 1035	21.25 540	16.25 413	26.88 683
* IV 16-45-46-15.5		200 61	125 38	125 38	70 21	258 117	325 147	14.25 362	7.5 191	15.5 394	39.13 993	51 1295	22.5 571	46.38 1178	23.88 606	12.25 311	31.38 797
* IV 18-45-46-15.5		250 76	175 53	175 53	100 30	276 125	343 156	16.25 413	9.5 241	15.5 394	39.13 993	51 1295	24.5 622	46.38 1178	23.88 606	14.25 362	31.38 797

Notes:

1. Specifications subject to change.
2. Upon request, reels can be supplied with drum lengths other than shown and with disc sizes in other diameters.
3. When ordering power rewind models, prefix model number with:
   - **A** = Air Rewind – Supplied with control valve and 18" air hose.
   - **EP** = Electric Rewind (1/2HP) – 12v DC rewind supplied with non-explosion proof switch and solenoid; 115v AC rewind is not supplied with switch but it can be ordered separately.
   - **EPJ** = Explosion Proof Electric Rewind (1/2 HP) – Supplied with explosion proof switch, solenoid, and junction box.
   - **HD** = Hydraulic Rewind – Not supplied with control valve.
4. **Be sure to check dimensions and weights prior to ordering.**

NOTICE: A flexible connector must be used between the inlet pipe and the inlet swivel joint.

* When ordering with 2" inlet/outlet, place a "2" after IV (ie: IV 220-39-40).

***X, Y indicate mounting holes.

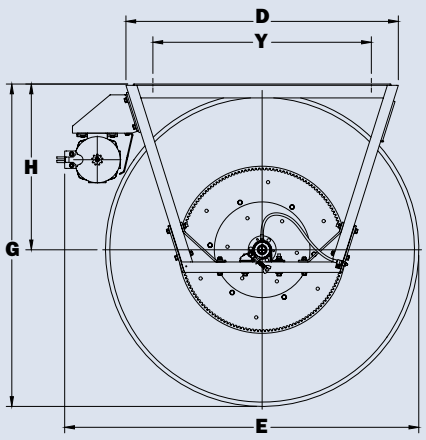

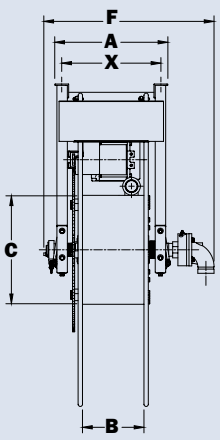

Series **IV5000** | Single Wrap

- **For Inverted Installation**

To handle single 1-3/8" I.D. through 2" I.D. hose.

- Effortless and fast rewinding, wrapping, guiding of hose.
- Chain and sprocket drive powered by electric, hydraulic, compressed air motor.
- Auxiliary crank rewind is optional.
- 12 volt rewind; strap brake standard. Air brake optional.
- Standard with a reduction unit only. Electric clutch units optional.
- **5100 Series** - 90° ball bearing swivel joint, 1-1/2" female NPT threads, 2" Victaulic® groove, flanged riser with 1-1/2" female NPT threads.
- **5200 Series** - 90° ball bearing swivel joint, 2" Victaulic® groove, flanged riser with 2" female NPT threads.
- Inlet, hub assembly is aluminum.
- Joint and riser are ductile iron for petroleum fuel.
- Standard: pressures to 600 psi (41 bar).
- Standard fluid temperatures from -40° F to +400 °F (-40° C to +204° C).
- Consult factory for other pressures and temperatures.
- Refer to page 13 for installation options.

Standard Electric Rewind (EP) model shown with optional hose

PARTS DRAWING – ISO 197

Model Number For Power Rewind see Note 2	Hose Capacity of Reel feet m				Approx. Weight lb. kg		Reel Dimensions*** in. mm									
	I.D. in. mm	1-3/8 35	1-1/2 38	2 51	NET	SHIP	A	B	C	D	E	F POWER	G	H	X	Y
	O.D. in. mm	1.92 49	2.10 53	2.56 65												
IV5111-48-50-20		–	50	–	247	297	11.13	2.5	20	36	48	17.5	50	26	8.13	28
		–	15	–	112	135	283	64	508	914	1219	445	1270	660	296	711
IV5111-56-58-20		–	75	–	263	313	11.13	2.5	20	36	56	17.5	58	30	8.13	28
		–	23	–	119	142	283	64	508	914	1422	445	1473	762	206	711
IV5111-62-64-20		100	100	–	276	326	11.13	2.5	20	36	62	17.5	64	33	8.13	28
		30	30	–	125	148	283	64	508	914	1575	445	1626	838	206	711
IV5111-72-73-24		150	–	–	386	461	11.13	2.5	24	36	72	17.5	73	38	8.13	28
		46	–	–	175	209	283	64	610	914	1829	445	1854	965	206	711
IV5111-78-80-24		170	–	–	413	513	11.13	2.5	24	36	78	17.5	80	41	8.13	28
		52	–	–	187	233	283	64	610	914	1981	445	2032	1041	206	711
IV5218-56-58-20		–	–	50	268	318	12	3.63	20	36	56	19.25	58	30	9	28
		–	–	15	122	144	305	92	508	914	1422	489	1473	762	229	711
IV5218-62-64-20		–	–	75	280	330	12	3.63	20	36	62	19.25	64	33	9	28
		–	–	23	127	150	305	92	508	914	1575	489	1626	838	229	711
IV5218-70-72-20		–	–	100	295	370	12	3.63	20	36	70	19.25	72	37	9	28
		–	–	30	134	168	305	92	508	914	1778	489	1829	940	229	711

Notes:

1. Specifications subject to change.
2. When ordering power rewind models, prefix model number with:
   - **A** = Air Rewind – Supplied with control valve and 18" air hose.
   - **EP** = Electric Rewind (1/2 HP) – 12v DC rewind reels are supplied with switch and solenoid.
   - **HD** = Hydraulic Rewind – Not supplied with control valve.
3. **Be sure to check dimensions and weights prior to ordering.**

NOTICE: A flexible connector must be used between the inlet pipe and the inlet swivel joint.

*** X, Y indicate mounting holes.

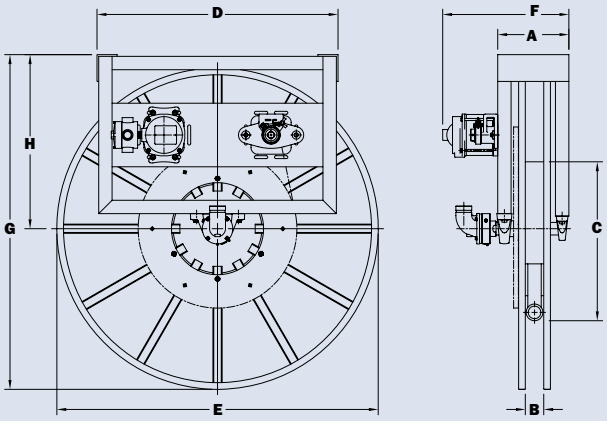

Phone: **518-797-3791** | Toll Free: **1-877-467-3357** | FAX: **518-797-3259** | Email: **reels@hannay.com** | **hannay.com**

Guide for Series IV Inverted Installations

For reels with 1-1/2" I.D. hub assembly to handle 1-1/4" through 2" I.D. hose.

When ordering a reel for inverted installation, please specify which of the following component locations you prefer. Please specify component location by letter. If not otherwise specified, reels will be shipped as shown in A.

Installation A

Hose unwinds from top of reel to curbside and from bottom of reel to streetside. Swivel joint is on side nearest tank. Rewind mechanism and braking devices are at the rear of the truck. Rewind motor is on streetside.

FROM CURBSIDE

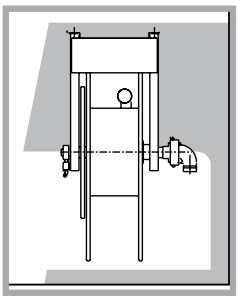

FROM STREETSIDE

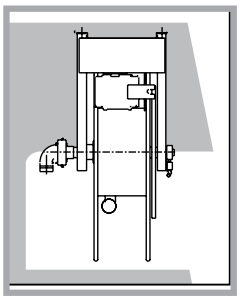

Installation B

Hose unwinds from top of reel to curbside and from bottom of reel to streetside. Swivel joint, rewind mechanism, braking, and locking devices are at the rear of the truck. Rewind motor is on streetside.

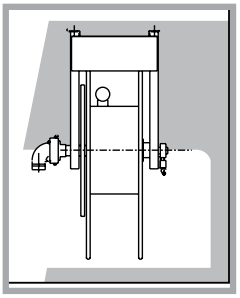

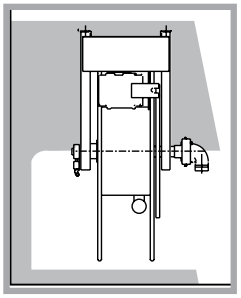

Installation C

Hose unwinds from bottom of reel to curbside and from top of reel to streetside. Swivel joint is on side nearest tank. Rewind mechanism, braking, and locking devices are at the rear of the truck. Rewind motor is on streetside.

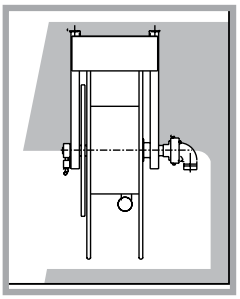

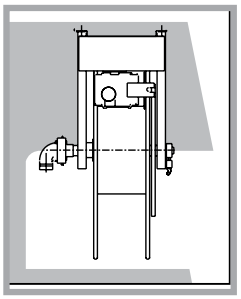

Series **DEF**

Diesel Exhaust Fluid (DEF) hose reels are built to help meet diesel emissions regulations. These reels feature a 304-grade stainless steel fluid path in various sizes. Spring rewind retractable reels, available for shorter lengths up to 1" ID hose, are listed below. Manual or power rewind reels, available for longer lengths up to 2" ID hose are listed on page 15.

To handle 1/2", 3/4" or 1" I.D. hose.

- Narrow frame and compact mounting base.
- Non-sparking ratchet assembly.
- Declutching arbor to prevent damage from reverse winding.
- Standard inlet: 90° 304 stainless steel swivel with EPDM seals (available in 1/2", 3/4" or 1" FNPT).
- Standard outlet: 304 stainless steel fluid path (available in 1/2", 3/4" or 1" FNPT).
- Standard pressures to 2000 psi (138 bar).
- Standard fluid temperatures from -65° F to +300 °F (-54° C to +149° C). Optional temperature ratings available - consult factory.
- 4-way roller assembly.
- Constant tension is available – consult factory.

Optional TR configuration shown

PARTS DRAWING – ISO 246 (1/2" HOSE), ISO 247 (3/4" HOSE), ISO 248 (1" HOSE)

Model Number (see notes)	Hose Capacity of Reel feet m			Approx. Weight lb. kg			Standard Roller Assy.	Reel Dimensions*** in. mm							
	I.D. in. / mm	1/2 / 13	3/4 / 19	1 / 25	NET	UPS/ FedEx SHIP Wt.	Freight SHIP Wt.		A	B	C	E	F	G	H	X
	O.D. in. / mm	.75 / 19	1.03 / 26	1.38 / 35												
DEF-N716-14-16-8C		25 / 8	– / –	– / –	52 / 24	64 / 29	87 / 39	N204	10 / 254	4 / 102	8 / 203	18.12 / 460	13 / 330	16.12 / 409	9.12 / 232	8 / 203
DEF-N716-19-20-10.5J		50 / 15	25 / 8	– / –	64 / 29	82* / 37	99 / 45	N206	10 / 254	4 / 102	10.5 / 267	20.75 / 527	13 / 330	20 / 508	10.62 / 270	8 / 203
DEF-N716-25-26-15.5B		75 / 23	– / –	– / –	90 / 41	– / –	125 / 57	N204	10 / 254	4 / 102	15.5 / 394	25.5 / 648	13 / 330	26 / 660	13.62 / 346	8 / 203
DEF-N716-23-24-10.5J		– / –	50 / 15	– / –	79 / 36	92* / 42	114 / 52	N204	10 / 254	4 / 102	10.5 / 267	24 / 610	13 / 22.75	24 / 610	12.62 / 321	8 / 203
DEF-N718-25-26-15.5B		– / –	75 / 23	– / –	96 / 44	– / –	131 / 59	N206	12 / 305	6 / 152	15.5 / 394	25.5 / 648	15 / 381	26 / 660	13.62 / 346	10 / 254
DEF-N816-23-24-10.5J		– / –	– / –	25 / 8	87 / 39	– / –	122 / 55	N204	10 / 254	4 / 102	10.5 / 267	24 / 610	14.125 / 359	24 / 610	12.62 / 321	8 / 203
DEF-N818-25-26-10.5B		– / –	– / –	50 / 15	102 / 46	– / –	137 / 62	N206	12 / 305	6 / 152	10.5 / 267	25.5 / 648	16.125 / 410	26 / 660	13.62 / 346	10 / 254

Notes:

A hose stop is necessary to keep spring from unwinding.

1. Specifications subject to change.
2. Reel models and capacities shown are for standard drag applications; for vertical lift applications, consult factory.
3. Other sizes, from standard components, available on request.
4. **Be sure to check dimensions and weights prior to ordering.**

NOTICE: A flexible connector must be used between the inlet pipe and the inlet swivel joint.

*Dimensional weight may apply when shipped as a parcel package (via FedEx or UPS Ground).

*** X, Y indicate mounting holes.

Original model numbers have been updated.

Please use crossover model numbers when ordering:

DEF-425 - use DEF-N716-14-16-8C
DEF-450 - use DEF-N716-19-20-10.5J
DEF-475 - use DEF-N716-25-26-15.5B
DEF-625 - use DEF-N716-19-20-10.5J**
DEF-650 - use DEF-N716-23 -24-10.5J**
DEF-675 - use DEF-N718-25-26-15.5B**
DEF-825 - use DEF-N816-23-24-10.5J
DEF-850 - use DEF-N818-25-26-10.5B

**Reel models for 3/4" ID hose will be supplied with 3/4" SST inlet adapter only.

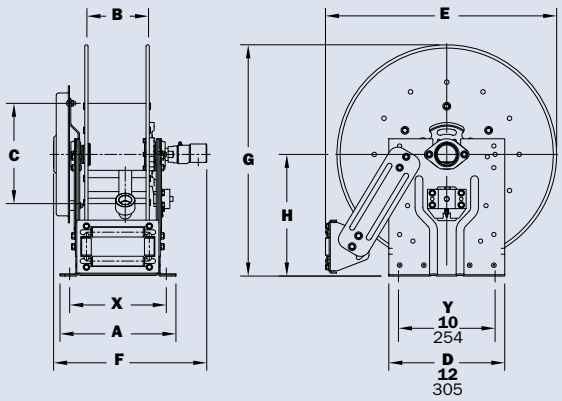

Available Roller Positions

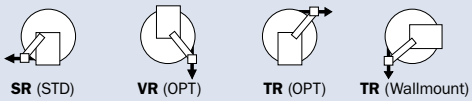

SR (STD) **VR** (OPT) **TR** (OPT) **TR** (Wallmount)

Phone: **518-797-3791** | Toll Free: **1-877-467-3357** | FAX: **518-797-3259** | Email: **reels@hannay.com** | **hannay.com**

Series **DEF**

To handle longer lengths of single 1/2" through 2" I.D. hose.

- Heavy-duty reels designed for longer lengths.
- Choose gear-driven crank rewind or chain and sprocket drive powered by an electric, hydraulic, or compressed air motor.
- Fricton brake standard on all reels.
- Standard inlet: 90° 304 SST swivel with EPDM seals (available in 1/2" through 2" FNPT).
- Standard outlet: 304 SST fluid path (available in 1/2" through 2" FNPT).
- Standard pressures to 1000 psi (69 bar).
- Standard fluid temperatures from -65° F to +300 °F (-54° C to +149° C).
- Consult factory for other pressures and temperatures.
- Optional 4-way rollers and chain guard.
- **NOTE:** Must prefix model with DEF- when ordering.

DEF-6000 Series
Standard configuration shown with Electric Rewind
Handles 1/2", 3/4" or 1" ID Hose

PLEASE CONSULT FACTORY FOR MANUAL OR POWER REWIND DEF REELS FOR LONGER LENGTH HOSE:

Contact Hannay Reels Inside Sales Department at: 877-467-3357 or email reels@hannay.com for more information on options available. Be sure to provide detailed specifications on hose type, ID/OD, length, rewind preference and any other important specifications when ordering.

Find reels for every need.

Learn more about all of our reels, including specs, drawings, and even how to select the right reels and accessories for your industry.

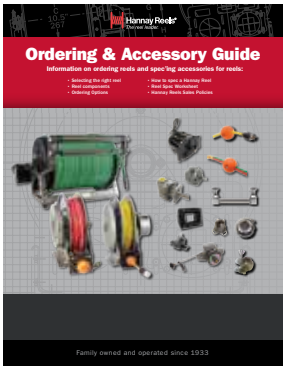

Ordering & Accessory Guide

- Selecting the right reel
- Reel components
- Available accessories
- How to spec and order reels and accessories
- Ordering options
- Hannay Reels policies

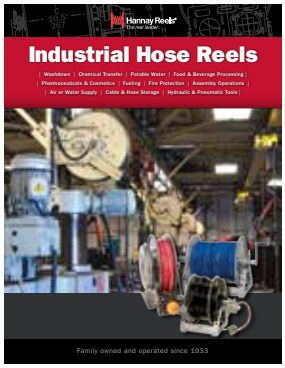

Industrial Hose Reels

- High pressure/low pressure reels
- Air/Lube/Grease reels
- Fueling
- Washdown/Power Wash
- Industrial Fire Protection
- Hydraulic/Pneumatic applications
- Hose storage

Cable Reels

- Electric Tools
- Crane operations
- Portable Llghting
- Portable live and storage reels
- Video/Broadcast
- Static and Utility grounding reels

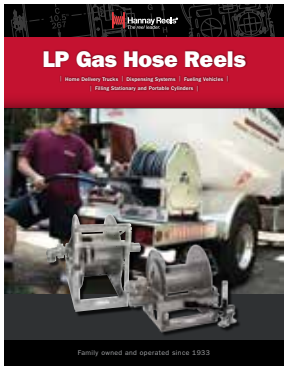

LP Gas

- Home delivery vehicles
- Dispensing systems
- Electric, hydraulic, air and spring rewind reels
- Manual rewind vapor reels
- Aluminum construction

View all our reel catalogs online at hannay.com

Family owned and operated since 1933, Hannay Reels is the world leader in both OEM and aftermarket applications. Hannay offers thousands of standard hose reel and cable reel models, as well as unmatched custom capabilities. We can easily and affordably customize a reel to meet your exact specifications – built to last, delivered fast. Additional catalogs are available through your local Hannay Reels dealer or online at **hannay.com.**

Hannay Reels®
The reel leader.

553 State Route 143 | Westerlo, New York 12193
Email: reels@hannay.com | **hannay.com**

All Hannay reels are constructed of quality heavy gauge steel (optional aluminum or stainless steel also available on most models).

Phone: **518-797-3791** | Toll Free: **1-877-467-3357** | FAX: **518-797-3259**

Form H-0417-FD REV 7 10/24

MADE IN USA