Hannay Reels®
The reel leader.

LP Gas Hose Reels

| Home Delivery Trucks | Dispensing Systems | Fueling Vehicles |
| Filling Stationary and Portable Cylinders |

Family owned and operated since 1933

CONTENTS

Hannay hose reels come in all sizes and capacities.

LP Gas Hose Reels		I.D. Hose Sizes	Page
Hannay Reels Sales Policies			3
Manual or Power Rewind Reels			
Series PB/DPB		1" – 1-1/2"	4-5
Power Rewind Reels			
Series PBGMB/PBGMT		1" – 1-1/2"	6-7
Power Rewind Liquid Reel with Manual Rewind Vapor Reel			
Series PBM	Liquid	1" – 1-1/2"	8
	Vapor	1/2" – 1"	
Spring Rewind Reels			
Series SPBN800/SPB800		3/4" or 1"	9
Accessories			10
Hannay Reels Spec Worksheet			11

Only one reel sets the standard in the propane delivery industry.

Our reels are created specifically for fuel delivery applications – never retrofitted to the job – so you can expect superior fit and function. We offer thousands of standard reels – or can create custom designs – that are built strong to last long, require minimal maintenance, and provide a lifetime of value.

Often outlasting the vehicles they're on, our reels provide safer operation with:

- Non-sparking ratchet assemblies
- Explosion-proof motors
- Suspended IV reels that allow access on either side of the vehicle

All Hannay LP Gas reels are handcrafted and available in aluminum, stainless steel, e-coated, and painted steel for superior protection against contamination and corrosion in sensitive or caustic environments.

Uses:

- Home delivery vehicles
- Dispensing systems
- Fueling vehicles
- Filling stationary and portable cylinders

Note to Designers and Engineers

The reels shown in this catalog are the standard of the industry.

These models reflect various installation and performance requirements.

The high quality of our **standard steel construction** is only the beginning.

Hannay Reels offers any size configuration to fit a defined space, and we construct many models of reels of **aluminum** or **stainless steel**. Specifically, we use 5000 and 6000 Series aluminum and 304 stainless steel in the manufacture of frames, discs, drums, and internals as well as other structural components. This type of construction eliminates the need for maintenance repainting and part replacement due to rust or corrosion.

Please consult factory on any fuel handling questions.

For the many accessories and components available on our standard reel models such as roller guides, switches, brakes and locks, etc., please refer to our Ordering & Accessory Guide H-0415-OA.

Mounting Hole Sizes	
N Series Reels	7/16" wide x 7/8" long slot running front to back
Pressed Frame Reels and Channel Framed Reels	7/16" wide x 7/8" long slot running left to right

Phone: **518-797-3791** | Toll Free: **1-877-467-3357** | FAX: **518-797-3259** | Email: **reels@hannay.com** | **hannay.com**

Hannay Reels **Sales Policies**

Hannay Reels 3-Year Limited Warranty

Products manufactured by Hannay Reels, Inc. ("Hannay") are warrantied for 3 years from date of shipment when properly installed, maintained, and operated in accordance with Hannay instructions. In no event will Hannay have a warranty obligation for normal wear and tear, or for products that have, at Hannay's determination, been subjected to accident, abuse, misapplication, improper installation or improper maintenance. Common examples of normal wear and tear would include paint finish, swivel joint seal wear, and switch or motor brush wear.

Hannay makes no warranties, express or implied, other than those included in this warranty statement, and we disclaim any implied warrant of merchantability or fitness for any particular purpose. Hannay will not be liable for any consequential, incidental, or indirect damages from any cause whatsoever.

Failure to use a flexible inlet connection on any live hose reel will void the swivel joint warranty. Failure to use a properly sized circuit breaker with any electric rewind motor will void the electric motor warranty. Failure to use a filter and lubricator on any air rewind motor will void the air motor warranty. Failure to follow all procedures outlined in the Safety Guidelines document will void the warranty.

Components not manufactured by Hannay will be subject to the original manufacturers' warranties. Examples of such components include: hose and cable, motors, speed controls, and switches, swivel joints and seals, slip ring and brush assemblies.

Equipment which proves to be defective upon our inspection will be replaced free of charge, including freight to the customer. Our responsibility ceases upon delivery to any common carrier and we do not, unless previously instructed, insure shipments beyond point of delivery to such carrier. **No material will be accepted for return without a return goods authorization (RGA).** This warranty extends to the replacement or repair of the reel or part (no labor).

Hannay reserves the right to modify or alter materials, dimensions, design, and construction when necessary to improve the performance of the reel and/or accessories, or to meet delivery requirements.

Notice on Reel Finish

Standard finish on Hannay reels is a high performance enamel paint. Standard color is metallic graphite. Other colors available, please consult factory.

Most of the major components on standard reels are e-coated prior to receiving final topcoat paint finish. This combination of e-coat and enamel topcoat will meet the finish requirements of most customer applications and environments.

In cases where requirements cannot be met with the standard finish, Hannay Reels can coat any model reel with an automotive primer, allowing application of final coating at your facility.

Alternatively, Hannay Reels can provide a quote for matching a customer-provided paint specification. For further information, please contact your Hannay Reels sales engineer and a special paint request form will be sent to you.

For environments where no paint finish is suitable, we offer both aluminum and stainless steel (304 grade) construction on most reel models.

Return Goods Policy

All Hannay reels are built to order. These orders are typically placed into production within 1 business day of receipt. Once production begins, it may not be possible to cancel the order.

To prevent returns because the wrong reels or parts were ordered, please use the Hannay Reels Spec Worksheet (either online or from our Ordering & - Accessory Guide) when specifying reels. Be sure to include any size, weight, pressure and/or material compatibility limitations for the application.

In the event that an item does need to be returned for credit, repair or replacement, prior approval must be obtained from Hannay Reels. Upon your request, we will send a Return Goods Authorization (RGA) form. A signed copy of this form must accompany the material when returned to us, with the RGA number clearly showing on the outside of the box—a label is provided to you that you can print and attach. No product will be accepted for return or credit without an authorized RGA number.

All material must be returned prepaid, unless otherwise noted on our RGA. No return will be accepted that has been damaged due to improper return packaging, tampered with or altered from its original condition. Our restocking and handling fee is a minimum of 25% for standard catalog reels and parts. Custom reels specially built to customer specifications cannot be returned for any reason.

Series **PB/HDDPB**

To handle single 1" through 1-1/2" I.D. hose.

- Standard hose reel is steel construction, painted graphite. Aluminum or stainless steel construction is available.
- "SB" prefix denotes polished aluminum construction, offering both reduced weight and superior corrosion resistance compared to standard steel construction.
- Series PB are explosion-proof reels.
- Series HDDPB reel is direct hydraulic drive, eliminating the use of chain and sprockets.
- Choose gear-driven crank rewind, #40 chain and sprocket drive powered by an electric, hydraulic or compressed air motor or direct drive hydraulic rewind motor.
- Crank rewind reels and direct drive reels supplied with pinion brake.
- Power rewind reels (chain and sprocket driven) supplied with a strap brake. Other brake and locking devices may be specified.
- Standard inlet: 90° ball bearing swivel joint, 1-1/2" female NPT threads.
- Standard outlet: 1" female NPT threads. Standard inlet, outlet riser, and hub assembly are steel.
- Other sizes and/or threads can be furnished and must be specified.
- Pressures to 350 psi (24 bar).
- Standard fluid temperatures from -40° F to +300° F (-40° C to +149° C).
- Optional pressure and temperature ratings available - consult factory.
- Chain guard available upon request, must be specified.
- Rollers and roller mounting brackets are accessory items. Specify roller position.

Series PB
Standard configuration shown with Electric Rewind (E)

Series HDDPB
Direct drive hydraulic (HDD) rewind shown with optional Assembly C rollers

Phone: **518-797-3791** | Toll Free: **1-877-467-3357** | FAX: **518-797-3259** | Email: **reels@hannay.com** | **hannay.com**

Series **PB/HDDPB**

PARTS DRAWING: ALUMINUM CONSTRUCTION: (≤30 DISC SIZE) – ISO 202; (≤36 DISC SIZE) – ISO 204;
STAINLESS STEEL CONSTRUCTION: (≤30 DISC SIZE)– ISO 201; (≤36 DISC SIZE) – ISO 203;
STEEL CONSTRUCTION (≤30 DISC SIZE) – ISO 264; (≤36 DISC SIZE) – ISO-271

Model Number For Power Rewind see Note 4	Hose Capacity of Reel feet m			Approx. Weight Power Rewind lb. kg				Reel Dimensions*** in. mm										
	I.D. in. mm	1 25	1-1/2 38	Steel		Alum.		A	B	C	D	E	F POWER	F DIRECT DRIVE HYD	G	H	X	Y
	O.D. in. mm	1.5 38	2.16 55	NET	SHIP	NET	SHIP											
PB24-23-24		125	–	142	184	119	160	21	15.5	10.5	20.5	22.75	29.25	35.12	23.5	12.12	13	16.75
		38	–	64	83	54	72	533	394	267	521	578	743	892	597	308	330	425
PB30-23-24		150	–	155	197	124	165	27.5	22	10.5	20.5	22.75	35.75	41.62	23.5	12.12	19.5	16.75
		46	–	70	89	56	75	699	559	267	521	578	908	1057	597	308	495	425
PB26-25-26		150	–	155	197	137	178	23	17.5	10.5	25.5	24.75	31	37	27.88	15.5	15	21.75
		46	–	70	89	62	81	584	445	267	648	629	787	940	708	394	381	552
PB28-25-26		200	–	163	205	157	198	25.5	20	10.5	25.5	24.75	33.75	39.62	27.88	15.5	17.5	21.75
		61	–	74	93	71	90	648	508	267	648	629	857	1006	708	394	445	552
PB22-30-31		250	–	158	208	130	175	19	13.5	10.5	25.5	28.75	27.25	33.12	29.88	15.5	11	21.75
		76	–	71	94	59	79	483	343	267	648	730	692	841	759	394	279	552
PB18-33-34		200	–	157	207	146	194	14.5	9.5	10.5	31.5	31.75	23.75	29.12	33.62	17.75	7	27.75
		61	–	71	94	66	89	368	241	267	800	806	603	740	854	451	178	705
PB24-25-26-15.5		–	50	160	202	133	174	21	15.5	15.5	25.5	24.75	29.25	–	27.88	15.5	13	21.75
		–	15	64	91	60	79	533	394	394	648	629	743	–	708	394	330	552
PB28-25-26-15.5		–	75	173	215	159	200	25.5	20	15.5	25.5	24.75	33.75	–	27.88	15.5	17.5	21.75
		–	23	78	97	72	91	648	508	394	648	629	857	–	708	394	445	552
PB26-30-31-15.5		–	100	173	215	140	185	23	17.5	15.5	25.5	28.75	31.25	–	29.88	15.5	15	21.75
		–	30	78	97	63	84	584	445	394	648	730	794	–	759	394	381	552

Notes:

1. Specifications subject to change.
2. Upon request, reels can be supplied with drum lengths other than shown and with disc sizes in other diameters.
3. Dimensions shown for reels up to and including 30-31 disc size reflect pressed frames. Reel sizes ending in (33-34) are built with rollform/square tubing construction.
4. When ordering power rewind models, prefix model number with:
   - **A** = Air Rewind–Supplied with control valve and 25" air hose.
   - **E** = Explosion-Proof Electric Rewind (2/3 HP) – Supplied with explosion-proof switch, solenoid, and junction box.
   - **HD** = Hydraulic Rewind–Not supplied with control valve.
   - **HDD** = Direct Drive Hydraulic Rewind–Not supplied with control valve.

   (When ordering **A, HD & HDD** power rewind reels deduct 20 lbs. from ship weight).
5. **Be sure to check dimensions and weights prior to ordering.**

NOTICE: A flexible connector must be used between the inlet pipe and the inlet swivel joint.

***X, Y indicate mounting holes.

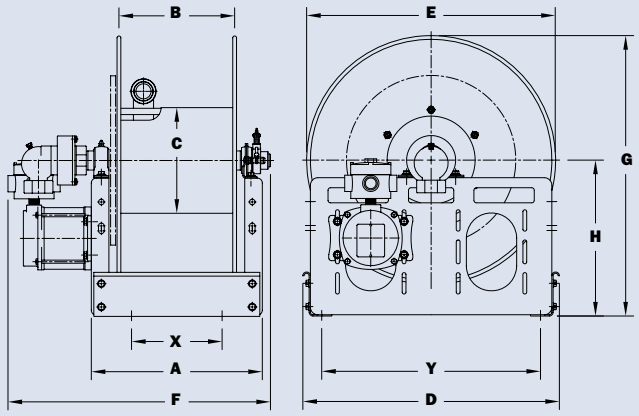

Series EPB

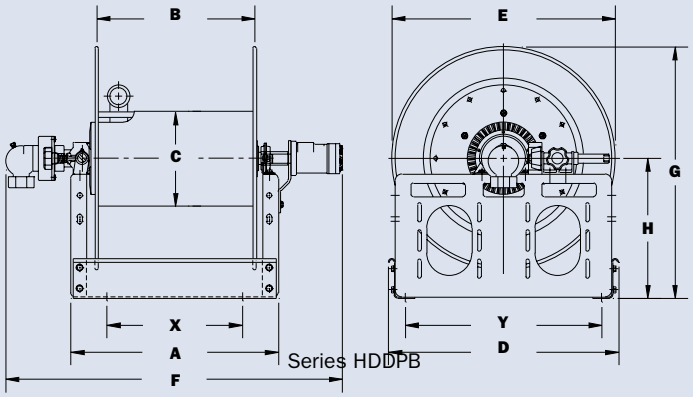

Series HDDPB

Series **PBGMB/PBGMT**

To handle single 1" or 1-1/2" I.D. hose.

- Standard hose reel is steel construction, painted graphite. Aluminum or stainless steel construction is available.
- "SB" prefix denotes polished aluminum construction, offering both reduced weight and superior corrosion resistance compared to standard steel construction.

Both Series

- Choose #40 chain and sprocket drive powered by an electric, hydraulic, compressed air or direct drive hydraulic rewind motor.
- Auxiliary crank rewind standard on Series HDDPB reels. Available on Series PB power rewind reels, at extra cost.
- Direct drive hydraulic rewind reels supplied with pinion brake. Electric powered rewind reels supplied with a strap brake.
- Other brake and locking devices may be specified. (See Ordering & Accessory Guide.)
- Standard inlet: 90° ball bearing swivel joint, 1-1/2" female NPT threads.
- Standard outlet: 1" female NPT threads. Standard inlet, outlet riser, hub assembly are steel.
- Other sizes and/or threads can be furnished and must be specified.
- Pressures to 350 psi (24 bar).
- Standard fluid temperatures from -40° F to +300° F (-40° C to +149° C).
- Optional pressure and temperature ratings available - consult factory.
- Chain guard available upon request, must be specified.
- Refer to page 10 for more information on Guidemaster® shown.

Series PBGMB

- The Assembly B bottom wind roller is standard.

Series EPBGMB with Bottom-Mounted Guidemaster®
Electric Rewind (E) shown

Series SBEPBGMB with Bottom-Mounted Guidemaster®
Polished Aluminum and Electric Rewind (E) shown

Series PBGMT/SBPBGMT with Guidemaster® Mounted on Top

Prefix becomes "PBGMT" (steel construction) or "SBPBGMT" (aluminum construction).

See chart on Page 7.

Series **PBGMB/PBGMT**

PARTS DRAWING: ALUMINUM CONSTRUCTION: (≤30 DISC SIZE) – ISO 202; (≤36 DISC SIZE) – ISO 204;
STAINLESS STEEL CONSTRUCTION: (≤30 DISC SIZE)– ISO 201; (≤36 DISC SIZE) – ISO 203;
STEEL CONSTRUCTION (≤30 DISC SIZE) – ISO 264; (≤36 DISC SIZE) – ISO-271
GUIDEMASTER – ISO 267; GUIDEMASTER BRACKETS – ISO 200

Model Number For Power Rewind see Note 3	Hose Capacity of Reel feet m	Approx. Weight Power Rewind lb. kg		Reel Dimensions*** in. mm													
	I.D. in. mm / O.D. in. mm	NET	SHIP	A	B	D	E	F POWER	F DIRECT DRIVE HYD	G	H	J	K	L	M	X	Y
	1 25 / 1.5 38																
PBGMB 24-23-24	**125** 38	**160** 73	**185** 84	**21** 533	**15.5** 394	**20.5** 521	**22.75** 578	**29.25** 743	**35.12** 892	**23.5** 597	**12.12** 308	**49** 1245	**36.75** 933	**30** 762	**–** –	**13** 330	**16.75** 425
PBGMB 30-23-24	**150** 46	**170** 77	**200** 91	**27.5** 699	**22** 559	**20.5** 521	**22.75** 578	**35.75** 908	**41.62** 1057	**23.5** 597	**12.12** 308	**49** 1245	**36.75** 933	**36.75** 933	**–** –	**19.5** 495	**16.75** 425
PBGMB 26-25-26	**150** 46	**185** 84	**215** 98	**23** 584	**17.5** 445	**25.5** 648	**24.75** 629	**31.25** 794	**37.12** 943	**27.88** 708	**15.5** 394	**47.75** 1213	**37.75** 959	**31** 787	**–** –	**15** 381	**21.75** 552
PBGMB 28-25-26	**200** 61	**191** 87	**221** 100	**25.5** 648	**20** 508	**25.5** 648	**24.75** 629	**33.75** 857	**39.62** 1006	**27.88** 708	**15.5** 394	**47.75** 1213	**39** 991	**34.75** 883	**–** –	**17.5** 445	**21.75** 552
PBGMB 22-30-31	**250** 76	**188** 85	**238** 108	**19** 483	**13.5** 343	**25.5** 648	**28.75** 730	**27.25** 692	**33.12** 841	**29.88** 759	**15.5** 394	**52.25** 1327	**35.75** 908	**29** 737	**–** –	**11** 279	**21.75** 552
PBGMB 18-33-34	**200** 61	**175** 79	**225** 102	**14.5** 368	**9.5** 241	**31.5** 800	**31.75** 806	**23.75** 603	**29.12** 740	**33.62** 854	**17.75** 451	**56.75** 1441	**33.5** 851	**26.75** 679	**–** –	**7** 178	**27.75** 705
PBGMT 24-23-24	**125** 38	**168** 76	**193** 88	**21** 533	**15.5** 394	**20.5** 521	**22.75** 578	**29.25** 743	**35.12** 892	**29.5** 749	**12.12** 308	**33** 838	**36.75** 933	**30** 762	**31.5** 800	**13** 330	**16.75** 425
PBGMT 30-23-24	**150** 46	**178** 81	**208** 94	**27.5** 699	**22** 559	**20.5** 521	**22.75** 578	**35.75** 908	**41.62** 1057	**29.5** 749	**12.12** 308	**33** 838	**40.62** 1032	**36.75** 933	**31.5** 800	**19.5** 495	**16.75** 425
PBGMT 26-25-26	**150** 46	**193** 88	**223** 101	**23** 584	**17.5** 445	**25.5** 648	**24.75** 629	**31.25** 794	**37.12** 943	**32.88** 835	**15.5** 394	**33.25** 845	**37.75** 959	**31** 787	**37.25** 946	**15** 381	**21.75** 552
PBGMT 28-25-26	**200** 61	**181** 82	**211** 96	**25.5** 648	**20** 508	**25.5** 648	**24.75** 629	**33.75** 857	**39.62** 1006	**33** 838	**15.5** 394	**34** 864	**39** 991	**34.75** 883	**35** 889	**17.5** 445	**21.75** 552
PBGMT 22-30-31	**250** 76	**196** 88	**246** 112	**19** 483	**13.5** 343	**25.5** 648	**28.75** 730	**27.25** 692	**33.12** 841	**36.13** 918	**15.5** 394	**35.5** 902	**35.75** 908	**29** 737	**42.5** 1080	**11** 279	**21.75** 552
PBGMT 18-33-34	**200** 61	**183** 83	**233** 106	**14.5** 368	**9.5** 241	**31.5** 800	**31.75** 806	**23.75** 603	**29.12** 740	**38.375** 975	**17.75** 451	**37** 940	**38.38** 975	**26.38** 670	**44.75** 1137	**7** 178	**27.75** 705

Notes:

1. Specifications subject to change.
2. Upon request, reels can be supplied with drum lengths other than shown and with disc sizes in other diameters.
3. When ordering power rewind models, prefix model number with:
   E = Explosion-Proof Electric Rewind (2/3 HP)–Supplied with explosion-proof switch, solenoid, and junction box.
   HDD = Direct Drive Hydraulic Rewind–Not supplied with control valve. When ordering **HDD** power rewind reels deduct 20 lbs. from ship weight).

   Air or hydraulic chain driven rewind available, please consult factory.
4. Dimension "J" is maximum, with Guidemaster® in operating position. Dimension "K" is maximum, with Guidemaster® in traveling position opposite rewind motor, as shown in dimensional drawing.

   Dimension "L" is maximum, with Guidemaster® in traveling position on same side as rewind motor.
5. Guidemaster® weight is approximately 21 lbs. Guidemaster® is shipped as parts.
6. **Be sure to check dimensions and weights prior to ordering.**
7. Consult factory for reels using 1-1/2" I.D. hose.

NOTICE: A flexible connector must be used between the inlet pipe and the inlet swivel joint.

***X, Y indicate mounting holes.

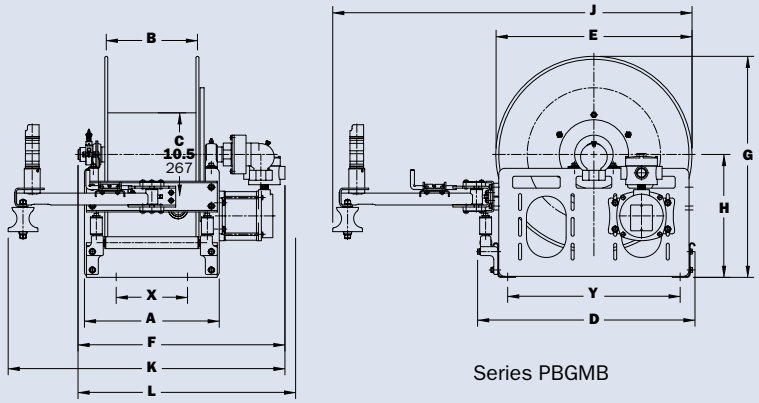

Series PBGMB

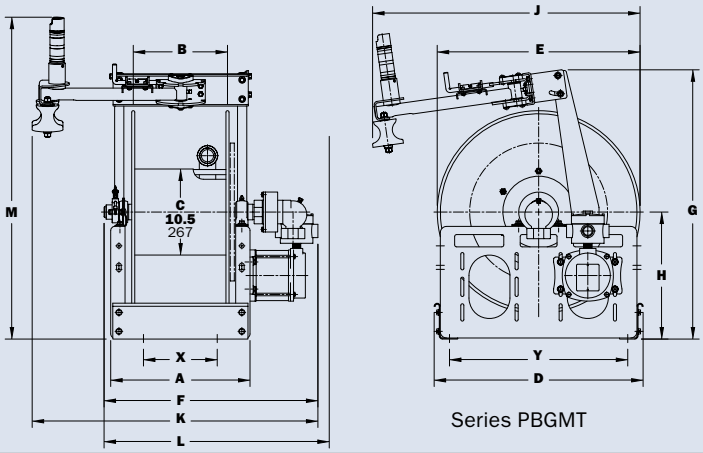

Series PBGMT

Series **PBM**

To handle 1" through 1-1/2" I.D. liquid hose and 1/2" through 1" I.D. vapor hose.

- Standard hose reel is steel construction, painted graphite. Aluminum or stainless steel construction is available.
- "SB" prefix denotes polished aluminum construction, offering both reduced weight and superior corrosion resistance compared to standard steel construction.
- **Liquid reel:** Standard inlet: 90° ball bearing swivel joint, 1-1/2" female NPT threads; Standard outlet: 1" female NPT threads riser; and #40 chain and sprocket drive powered by an electric, hydraulic or compressed air motor; and gear-driven crank rewind.
- **Vapor reel:** Standard inlet: 90° ball bearing swivel joint, 1" female NPT threads; Standard outlet: 1" female NPT threads riser; and gear-driven crank rewind.
- Standard inlet, outlet riser, and hub assembly are steel. Other sizes and/or threads can be furnished and must be specified.
- Pressures to 350 psi (24 bar). Standard fluid temperatures from -40° F to +300° F (-40° C to +149° C). Optional pressure and temperature ratings available - consult factory.
- Pinion shaft brake standard, other locking devices may be specified.
- Rollers and roller mounting brackets are accessory items. Specify roller position.
- Chain guard available upon request, must be specified.

Series PBM
Top wind configuration shown
with Gear Driven Crank Rewind Vapor Reel and Electric Rewind (E) Liquid Reel

PARTS DRAWING – ISO 123

Model Number For Power Rewind see Note 3	Hose Capacity of Reel feet m				Approx. Weight lb. kg		Reel Dimensions*** in. mm									
	Liquid Reel	Vapor Reel														
	I.D. in. mm	1 25	1/2 13	3/4 19	1 25	NET	SHIP	A	B	B1	D	E	F POWER	G	H	X	Y
	O.D. in. mm	1.5 38	.94 24	1.26 32	1.5 38												
PBM 24-16-23-24		125	175	80	75	173	218	32	15.5	7.5	23.75	23	46.25	23.88	12.5	24.5	20
		38	53	24	23	78	99	813	394	191	603	584	1175	607	318	622	508
PBM 30-16-23-24		150	175	80	75	274	319	38.5	22	7.5	23.75	23	52.75	23.88	12.5	31	20
		46	53	24	23	124	145	978	559	191	603	584	1340	607	318	787	508
PBM 28-16-25-26		200	225	100	75	279	324	36.5	20	7.5	25.5	24.75	50.75	25.88	13.5	29	21.75
		61	69	30	23	127	147	927	508	191	648	629	1289	657	343	737	552

Notes:

1. Specifications subject to change.
2. Upon request, reels can be supplied with drum lengths other than shown and with disc sizes in other diameters.
3. When ordering power rewind models, prefix model number with:
   - **A** = Air Rewind–Supplied with control valve and 25" air hose.
   - **E** = Explosion-Proof Electric Rewind (2/3 HP)–Supplied with explosion-proof switch, solenoid, and junction box.
   - **HD** = Hydraulic Rewind–Not supplied with control valve.

   (When ordering **A & HD** power rewind reels deduct 20 lbs. from ship weight).
4. **Be sure to check dimensions and weights prior to ordering.**

NOTICE: A flexible connector must be used between the inlet pipe and the inlet swivel joint.

***X, Y indicate mounting holes.

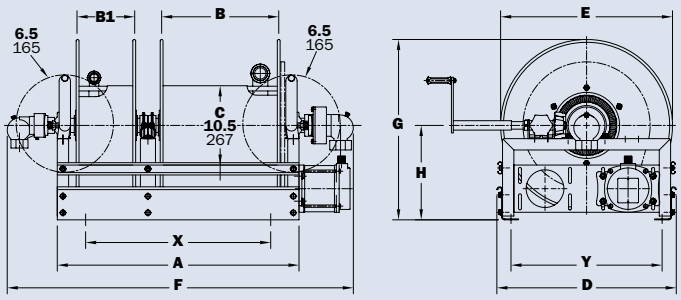

Phone: **518-797-3791** | Toll Free: **1-877-467-3357** | FAX: **518-797-3259** | Email: **reels@hannay.com** | **hannay.com**

Series **SPBN800/SPB800**

To handle 3/4" or 1" I.D. hose.

- Standard hose reel is steel construction, painted graphite. Stainless steel construction is available.
- **SPB800 only**: Aluminum construction is also available. “SB” prefix denotes polished aluminum construction, offering both reduced weight and superior corrosion resistance compared to standard steel construction.
- Rollformed frame for heavy-duty applications must be specified.
- Non-sparking ratchet locks reel, and declutching arbor prevents damage from reverse winding.
- Standard inlet: 90° ball bearing swivel joint, 1" female NPT threads. Standard outlet: 1" female NPT threads. Other sizes and/or threads can be furnished and must be specified.
- Pressures to 350 psi (24 bar). Standard fluid temperatures from -40° F to +300° F (-40° C to +149° C). Optional pressure and temperature ratings available - consult factory.
- Supplied 4-way roller assembly. Specify roller position.

Series SPBN800
Optional TR configuration shown

Series SPB800
Standard SR configuration shown

PARTS DRAWING: SERIES SPBN800 – ISO 81; SERIES SPB800 – ISO 42

Model Number	Hose Capacity of Reel feet m				Approx. Weight lb. kg		Roller Assy Supplied on Std. Models	Reel Dimensions*** in. mm									
	I.D. in. mm	1/2 13	3/4 19	1 25	NET	SHIP		A	B	C	D	E	F	G	H	X	Y
	O.D. in. mm	.94 24	1.25 33	1.5 40													
SPBN816-19-20-10.5J		35 11	25 8	15 5	75 34	98 44	N204	10 254	4 102	10.5 267	12 305	20.75 527	16.12 409	20 508	10.62 270	8 203	10 254
SPBN816-23-24-10.5J		50 15	50 15	25 8	87 39	116 53	N204	10 254	4 102	10.5 267	12 305	24 610	16.12 409	24 610	12.62 321	8 203	10 254
SPBN816-25-26-10.5B		65 20	60 18	35 11	96 44	131 59	N204	10 254	4 102	10.5 267	12 305	25.5 648	16.12 409	26 660	13.62 346	8 203	10 254
SPBN818-25-26-10.5B		60 18	70 21	50 15	102 46	137 62	N206	12 305	6 152	10.5 267	12 305	25.5 648	18.12 460	26 660	13.62 346	10 254	10 254
SPB816-19-20-10.5J		35 11	25 8	15 5	75 34	98 44	R204	9.25 235	4 102	10.5 267	20.5 521	18.75 476	16.88 429	19.75 502	10.38 264	4.5 114	14.75 375
SPB816-23-24-10.5J		50 15	50 15	25 8	87 39	116 53	R204	9.25 235	4 102	10.5 267	24.5 622	22.75 578	16.88 429	23.88 607	12.5 318	4.5 114	20 508
SPB816-25-26-10.5B		65 20	60 18	35 11	96 44	131 59	R204	9.25 235	4 102	10.5 267	26.25 667	24.75 629	16.88 429	25.88 657	13.5 343	4.5 114	21.75 552
SPB818-25-26-10.5B		60 15	70 15	50 8	102 39	137 53	R206	11.25 286	6 152	10.5 267	26.25 667	24.75 629	18.88 480	25.88 657	13.5 343	6.5 165	21.75 552
SPB816-30-31-15.5G		110 34	75 23	40 12	124 56	159 72	R204	9.25 235	4 102	15.5 394	30.5 775	28.75 730	16.88 429	31.38 797	17 432	4.5 114	25.25 614
SPB820-25-26-10.5A		75 23	85 26	75 23	131 59	166 75	R308	13.25 337	8 203	10.5 267	27 686	24.75 629	21.62 549	25.88 657	13.5 343	8.5 216	21.75 552
SPB820-30-31-15.5A		75 23	100 30	100 30	137 62	172 78	R308	13.25 337	8 203	15.5 394	30.5 775	28.75 730	21.62 549	31.38 797	17 432	8.5 216	25.25 641

Notes:

1. Specifications subject to change.
2. Others sizes, from standard components, available on request.
3. **For optional locations of joint and spring motor placement – consult factory.**
4. **Be sure to check dimensions and weights prior to ordering.**

NOTICE: A flexible connector must be used between the inlet pipe and the inlet swivel joint.

***X, Y indicate mounting holes.

Available Roller Positions

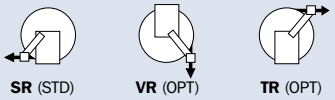

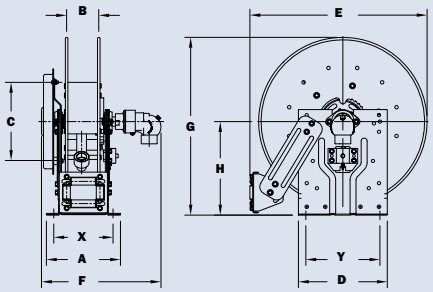

Series SPBN800 - Narrow Frame

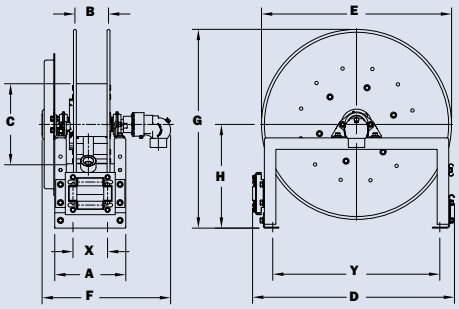

Series SPB800 - Rollformed Frame

Accessories

• GM-X Guidemaster® • FH-3 Roller and Spool Assembly

GM-X Guidemaster®

Multiposition hose guide with explosion-proof rewind control

The Guidemaster® helps unwind and rewind hose faster, easier, and with less damage to the hose. Five positive locking positions let the operator pull the hose out and away from sharp corners of cabinet or deck. An explosion-proof push-button switch, with protective cover, in the Guidemaster® handle lets the operator control the rewind motor and guide the hose on the reel in neat, uniform coils.

GM-X with EPS-1 switch & cover

Construction: Grade 303 SST welded main body with black powder coat finish, wear-resistant Zamak 3 (zinc alloy) rollers and bearings on the top and bottom of the yolk with dust caps to limit dust and dirt intrusion. Switch has Class 1, Division 1 (Groups C & D) classification and is provided with a protective cover with push button switch.

The Guidemaster® can be ordered in 3 ways:

1. Guidemaster® only, supplied with 4 mounting bolts and ready to be attached to your mounting brackets.
2. Guidemaster® and brackets, includes steel mounting bracket, beveled spacers, and fasteners designed for your reel. Ready to install. Specify top- or bottom-wind.
3. Guidemaster® mounting brackets factory installed. Specify top- or bottom-wind.

To Order: For factory installation of mounting bracket, Guidemaster® should be ordered when you order the reel. When purchasing Guidemaster® for installation on your present reel, give the complete model number and serial number of your reel and the complete part number of the Guidemaster®.

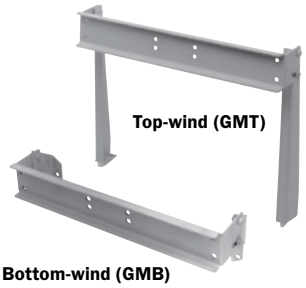

Top-wind (GMT)

Bottom-wind (GMB)

Circuit breaker must be used with all DC electric motors.

Note: This Guidemaster® can be used with reels up to a maximum drum width (or B dimension) of 22". Operates with up to a 2.16" O.D. hose.

FH-3 Roller and Spool Assembly

Not recommended for hoses larger than 1-1/2" I.D.

Speeds handling and reduces hose wear. Buffed stainless steel rollers resist corrosion, pitting, and abrasion. Polished, chrome-plated spools and blocks add lasting beauty to your equipment. Delrin bearing surfaces assure quiet operation and minimum wear.

Assembly can be factory installed, when specified, or ordered for field installation on reels or other equipment.

To Order: For factory installation, specify FH-3 Assembly and indicate position on reel. As an accessory, specify FH-3 Assembly and give length of roller (Dimension Z), and distance between mounting holes (Dimension X). Mounting brackets are available.

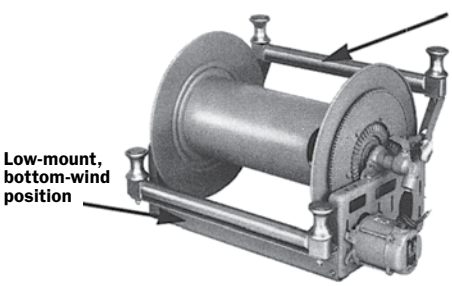

High-mount, top-wind position

Low-mount, bottom-wind position

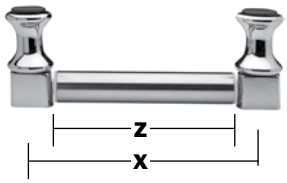

FH-3 top-wind mounting brackets

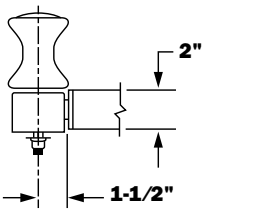

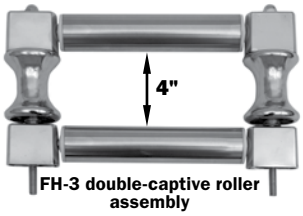

FH-3 double-captive roller assembly

FH-3 bottom-wind mounting brackets

Hose Reel **Spec Worksheet**

To specify Hannay reels, fill out this simple form and mail, fax or email it to your dealer.
Photocopy this page or download and print from hannay.com

1. Who is the reel for?

Contact | Date / /

Company | Position

Street Address

City | State | Zip | Country

Phone ( ) | Fax ( ) | Email

2. What is the reel for?

☐ **HOSE** (check one): ● Storage only ● Live Single hose ● Live Dual hose

Inside diameter: | Hose length: | Bend radius: | Flat hose dimensions:

Outside diameter: | Hose weight: | Coupling spacing:

Type of product handled live application (check one):

◯ Liquid (specify): | ◯ Temperature: | ◯ Oxygen/Acetylene: | ◯ Other (specify):

◯ Gases (specify): | ◯ Pressure: | ◯ Hydraulic fluid (specify):

Fluid path type (check one): ◯ Steel (standard) ◯ Aluminum ◯ Stainless Steel ◯ Other

Reel inlet type (check one): ◯ Swivel joint 90° (standard) ◯ Straight

Reel outlet type (riser): Size:

Thread (check one): ◯ National Pipe Thread (NPT) | ◯ Joint Industry Committee (JIC) | ◯ Other (specify):

◯ National Standard Thread (NST) | ◯ British Standard Pipe (BSP)

Indicate your custom specifications

3. What features does the reel need? Check type of rewind:

☐ **MANUAL REWIND**

◯ Disc rewind (hand over hand) | ◯ Gear-driven crank | ◯ Direct crank (permanent or removable) | ◯ Chain-driven crank

☐ **POWER REWIND**

◯ Spring | ◯ Air | ◯ Electric (voltage): | ◯ Hydraulic

Type of installation (check one): ◯ Floor ◯ Wall ◯ Overhead ◯ Vehicle

Temperature Range: | Environment:

Accessories (if any): | Hose Stop: ◯ Yes ◯ No

Roller Assemblies:

Finish: ◯ Painted steel (standard) | ◯ Aluminum ☐ Polished ☐ Unpolished | ◯ Stainless steel ☐ Polished ☐ Unpolished

Check type of installation and roller position for spring reels:

◯ Drag Position **SR**

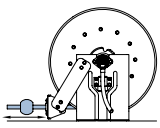

◯ Lift Position **VR**

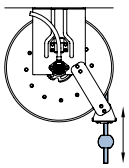

◯ Stretch (no roller) Position **TR**

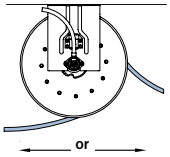

◯ Wall Mount Position **TR**

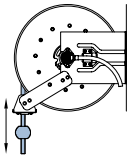

◯ Recovery (pick-up) (no roller)

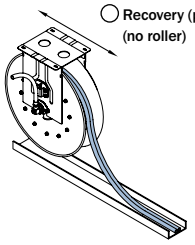

◯ Constant tension available on all roller positions

4. Specifying Location of Components

Optional Location of Components:

Location of the inlet, outlet riser, and rewind mechanism can be varied to meet your requirements and **must be specified on your order.** Unless otherwise specified, most reels will be shipped as **Right Top Rewind** with the inlet, outlet riser, and rewind mechanism on the operator's right.

◯ **RT – Right Top Rewind**
Standard – Always look at your reel from this position to determine right hand or left hand.

◯ **RB – Right Bottom Rewind**

◯ **LT – Left Top Rewind**

◯ **LB – Left Bottom Rewind**

Note: Use component location initials as suffix after model number (ie: EPB24-25-26 **LT**)

5. Please note size and/ or weight limitations for your installation

SPECIFICATIONS

Depth:

Height:

Width:

Weight:

For custom applications not found in our catalogs, call the Inside Sales Group at 518-797-3791.

Find reels for every need.

Learn more about all of our reels, including specs, drawings, and even how to select the right reels and accessories for your industry.

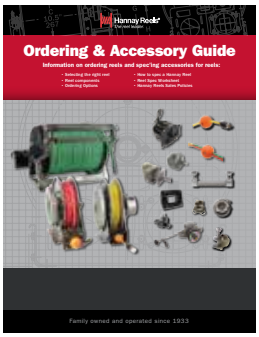

Ordering & Accessory Guide

- Selecting the right reel
- Reel components
- Available accessories
- How to spec and order reels and accessories
- Ordering options
- Hannay Reels policies

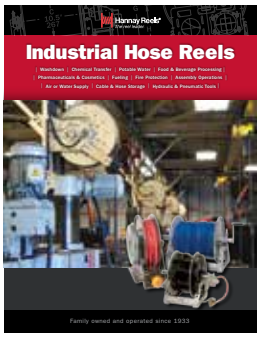

Industrial Hose Reels

- High pressure/low pressure reels
- Air/Lube/Grease reels
- Fueling
- Washdown/Power Wash
- Industrial Fire Protection
- Hydraulic/Pneumatic applications
- Hose Storage

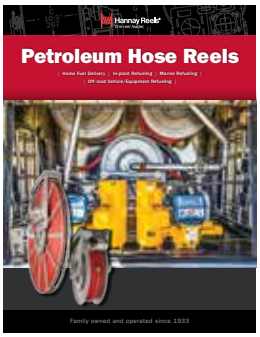

Petroleum Reels

- Home fuel delivery
- in-plant refueling
- Marine refueling
- Work-truck fueling
- Inverted installations
- Single-wrap and multi-wrap reels

Cable Reels

- Electric Tools
- Crane operations
- Portable LIghting
- Live and storage reels
- Video/Broadcast
- Static and Utility grounding reels

View all our reel catalogs online at hannay.com

Family owned and operated since 1933, Hannay Reels is the world leader in both OEM and aftermarket applications. Hannay offers thousands of standard hose reel and cable reel models, as well as unmatched custom capabilities. We can easily and affordably customize a reel to meet your exact specifications – built to last, delivered fast. Additional catalogs are available through your local Hannay Reels dealer or online at **hannay.com.**

Hannay Reels®
The reel leader.

553 State Route 143 | Westerlo, New York 12193
Email: reels@hannay.com | **hannay.com**

All Hannay reels are constructed of quality heavy gauge steel (optional aluminum or stainless steel also available on most models).

Phone: **518-797-3791** | Toll Free: **1-877-467-3357** | FAX: **518-797-3259**

Form H-0506-LP REV 5 / WEB 9-24

MADE IN USA